MUNICIPAL PARK NORTH MULTI-USE PATH (CIP T-133)

CITY OF HILLIARD
DEPARTMENT OF RECREATION AND PARKS
3800 VETERANS MEMORIAL DRIVE
HILLIARD, OHIO 43026

STEVE MAZER
DIRECTOR OF RECREATION AND PARKS

BID SUBMITTED BY: _____
COMPANY

_____
ADDRESS

_____
CITY **STATE** **ZIP**

Phone: _____

Fax: _____

Email: _____

Date of Submission: _____

BIDDING DOCUMENTS SHALL BE SUBMITTED IN THEIR ENTIRETY

Table of Contents
CITY OF HILLIARD, OHIO

MUNICIPAL PARK NORTH MULTI-USE PATH (CIP T-133)

Item	Pages
Bidder's Checklist	3
Notice to Contractors	5
Description of Project	8
Information for Bidders	9
General Conditions	17
Contract, Proposal, Standard Documents	34

Appendix A. Bid Schedule

Appendix B. Special Specifications

Appendix C. Detailed Specifications & Standard Drawings

Appendix D. Prevailing Wage Contract: Yes (**X**) No ( ) -- If yes, the contractor shall obtain the latest federal prevailing wage rates; Contractor is responsible for paying federal prevailing wage rates at the time that the work is being conducted.

BIDDER'S CHECKLIST

If this checklist is not completed and attached to a bid package, the bid will be disqualified.

This checklist is provided in order to ensure that all bids submitted include required signatures and information. This checklist **must** be copied from the bid book and attached as the cover sheet to the bid book prior to sealing and submitting bid.

BID SUBMITTED BY: _____

ADDRESS: _____

PHONE: _____ **FAX:**_____ **EMAIL:** _____
(E-mail of contact person for bid)

PROJECT NAME: _____ **CIP NUMBER:** _____

DATE OF BID SUBMISSION: _____

Bid documents **must** be submitted in their entirety. Bidders **must** submit the entire bid book to the office of the Director of Recreation and Parks, or to the City staff person as identified in the bid notice. **Do not unbind bid book and submit individual pages.** Documents that you must sign or include cannot be submitted separately – they must all be included in a bid book.

The bid submission **must** be clearly marked and submitted in a sealed envelope to the office and person identified in the bid notice. The following items **must** be completed and included in the bid submission in order to qualify as bid. Please respond to each item below with a checkmark in the appropriate column.

1. Addenda received and included with this bid: ____ Yes ____ No

   Indicate number of addenda received: _____

   Addenda(s) are signed by bidder to acknowledge receipt: ____ Yes ____ No

2. Current Certificate of Workers' Compensation is attached to Section 4 of this bid book.
   ____ Yes ____ No

3. Bid Guaranty and in Section 8 of Contract, Proposal and Standard Documents Section of this bid book, is completed and enclosed: ____ Yes _____ No

Form of Bid Bond: ____ Surety Company ____ Cashier's Check

____ Certified Check ____ Letter of Credit

4. Non-Collusion Affidavit in Section 9(a) of Contract, Proposal and Standard Documents Section of this bid book is signed by bidder and notarized: ____ Yes _____ No

5. Unresolved Finding for Recovery Affidavit in Section 9(b) of Contract, Proposal and Standard Documents Section of this bid book is signed and notarized: ____ Yes _____ No

6. Resources and Experience of Bidder in Section 10 of Contract, Proposal and Standard Documents Section of this bid book is completed and enclosed: _____ Yes _____ No

7. List of Substitutions in Section 11 of Contract, Proposal and Standard Documents Section of this bid book is completed and enclosed: _____ Yes _____ No

8. Non-Delinquent Tax Affidavit in Section 13 of Contract, Proposal and Standard Documents Section of this bid book is signed by bidder and notarized: _____ Yes _____ No

9. List of Subcontractors in Section 12 of Contract, Proposal and Standard Documents Section of this bid book is completed and enclosed: _____ Yes _____ No

10. Bid proposal in Appendix A of this bid book is complete, signed, and Federal Tax ID is provided: _____ Yes _____ No

11. I understand that if my company is notified that the City intends to award the contract to it, I <u>will</u> have the following provision, and no other language, included in the Certificate of Liability Insurance that must be provided to the City:

"Should any of the above described policies be cancelled before the expiration date thereof, the issuing insurer will mail written notice to the City pursuant to the policy provisions." _____ Yes

12. Your unique nine-digit Dun & Bradstreet number is: _____
    Your optional digit DUNS Plus number is: _____

13. Documentation is attached to the bid indicating that bidder is in good standing with the Drug-Free Workplace Program or a similar program approved by the Ohio Bureau of Workers' Comp. _____ Yes _____ No

I certify that the above items were included in the bid package at the time our bid was submitted to the City.

_____
Title of Authorized representative of Company/Bidder

_____
Signature

_____
Print Name Title

_____
Date

NOTICE TO CONTRACTORS

Sealed bids addressed to the Director of Recreation and Parks, City of Hilliard, 3800 Veterans Memorial Drive, Hilliard, Ohio 43026 and endorsed **"MUNICIPAL PARK NORTH MULTI-USE PATH (CIP T-133)"** will be received by the City of Hilliard, Franklin County, until **3:00 P.M. (Local Time), Thursday, June 4, 2015** at which time and place all bids will be publicly opened and read aloud for the following:

MUNICIPAL PARK NORTH MULTI-USE PATH (CIP T-133)

All bidders must register as a potential bidder with Stantec Consulting Services Inc., 1500 Lake Shore Drive, Columbus, Ohio 43204, in order to place a bid on this project. Registration is required to assure all bidders receive any clarifications or addenda.

Copies of the Contract Documents, Specifications, and Plans are on file with Stantec Consulting Services, Inc., 1500 Lake Shore Drive, Columbus, Ohio 43204 where they are available for inspection by prospective bidders. Contract Documents, Specifications, and Plans may be obtained from Stantec Consulting Services Inc., for a non-refundable fee of **Fifty Dollars ($50.00).**

The Engineer's estimated construction cost for the Project is **Four Hundred and Sixty-Three Thousand Six Hundred and Two Dollars (463,602.00).**

Failure to fully and accurately complete the bid documents shall be considered grounds for rejecting the bid. Bids may be withdrawn at any time before the scheduled closing time for receipt of bids, but may not be modified and resubmitted. No bid will be accepted if it exceeds the Engineer's cost estimate by more than ten percent (10%).

Technical questions about the project should be submitted in writing to Brian Hagerty, P.E., with Stantec Consulting Services Inc., at brian.hagerty@stantec.com or 1500 Lake Shore Drive, Columbus, Ohio 43204. Questions about contract documents should be addressed to Steve Mazer, Director of Recreation and Parks, City of Hilliard, Ohio at smazer@hilliardohio.gov or at 3800 Veterans Memorial Drive, Hilliard, Ohio 43026.

The Owner requires that construction of this Project begin on or after July 13, 2015 and be complete by October 31, 2015.

This project is subject to prevailing wage and bidders must comply with the prevailing wage rates on Public Improvements in Franklin County and the City of Hilliard, Ohio as determined by the Ohio Bureau of Employment Services, Wage and Hour Division, (614) 644-2239. Bid security must be furnished with all bids. If the bid is accepted, a contract must be executed and a satisfactory contract bond furnished, conditioned according to law, in the amount of one hundred percent (100%) of the contract price, within ten (10) days after Notice of Award. Sureties on all bonds must be satisfactory to the City.

The City reserves the right to reject any or all bids. An award will be made to the lowest and best bidder, taking into consideration such factors as the qualifications, past performance, efficiency and responsibility of the bidder along with the price of the bid. Informalities in making out the bid may be waived at the option of the City.

Steve Mazer
Director of Recreation and Parks
Hilliard, Ohio

Advertise Dates – SNP Hilliard NW News:	Thursday, May 21, 2015 Thursday, May 28, 2015
Bid Opening Date/Time:	Thursday, June 4, 2015 at 3:00 p.m. local time 3800 Veterans Memorial Drive, Multipurpose Room, Hilliard, Ohio

DESCRIPTION OF THE PROJECT

MUNICIPAL PARK NORTH MULTI-USE PATH (CIP T-133) project constructs a portion of Hilliard's Regional Trail infrastructure through the northern portion of Hilliard Municipal Park. Project includes pathway connections to existing neighborhoods and a split median crossing with Rectangular Rapid Flashing Beacons (RRFB'S) on Scioto Darby Road. The completion of the Project shall be no later than October 31, 2015.

All work on Scioto Darby Road shall be complete prior to August 15, 2015.

The work limits shall be clean and sufficiently protected from the public during the Hilliard Fall Festival, which is scheduled for Saturday, September 19, 2015 and Sunday, September 20, 2015. Storage of any equipment and materials on park property shall be coordinated with the Director of Recreation and Parks no later than 4 pm on Thursday, September 17, 2015.

The Engineer's estimated construction cost for the Project is **Four Hundred and Sixty-Three Thousand Six Hundred and Two Dollars (463,602.00).**

INFORMATION FOR BIDDERS

1. RECEIPT AND OPENING OF BIDS
2. PREPARATION OF BID
3. SUBSTITUTION OF MATERIALS
4. SUBCONTRACTS
5. BID MODIFICATIONS
6. QUALIFICATION OF BIDDER
7. BID SECURITY
8. CONTRACT AWARD AND EXECUTION
9. INSURANCE
10. POWER OF ATTORNEY
11. NOTICE TO PROCEED/TIME OF COMPLETION
12. CONDITIONS OF WORK
13 ADDENDA AND INTERPRETATIONS
14. LAWS AND REGULATIONS
15. OBLIGATION OF BIDDER
16. INCOME TAX
17. CONFLICTS OF INTEREST
18. OCCUPATIONAL SAFETY AND HEALTH ACT
19. ESTIMATE OF QUANTITIES
20. PAYROLL
21. RELEASE OF FINAL PAYMENT

1. RECEIPT AND OPENING OF BIDS

The City of Hilliard (hereinafter called the "Owner") invites bids on the forms provided. Bids will be received by the Owner at the office of the Department of Recreation and Parks until **3:00 p.m.** local time **Thursday, June 4, 2015** at which time and place all bids will be publicly opened and read aloud. The envelope containing the bid must be sealed, addressed to the Director of Recreation and Parks of the City of Hilliard, 3800 Veterans Memorial Drive, Hilliard, Ohio 43026 and designated as the **MUNICIPAL PARK NORTH MULTI-USE PATH (CIP T-133).**

The Owner may consider informal any bid not prepared and submitted in accordance with the provisions hereof and may waive any informalities or reject any and all bids. Any bid received after the time and date specified shall not be considered. Bids may be withdrawn at any time before the scheduled closing time for receipt of bids, but may not be modified and resubmitted. Modification of bids without withdrawal is addressed in Section 5.

2. PREPARATION OF BID

Each bid must be submitted on the forms provided. All blank spaces for bid prices must be filled in, in ink or typewritten, in both words and figures, and must be clearly legible. The entire bid book must be submitted. No additional prices or qualifying clauses shall be written in.

Each bid must contain the full name, address and telephone number of each bidder interested in the same.

Each bid must be submitted in a sealed envelope bearing on the outside the name of the bidder, its address and phone number, and the name of the Project for which the bid is

submitted. When forwarded by mail, the sealed envelope containing the bid must be in another envelope addressed as specified in Section 1.

All supplementary bid documents included within these Bid Documents must be completed and submitted with the bid, as stated in the Bidder's Checklist that must be completed and submitted with the bid package.

No bid will be accepted if it exceeds the Engineer's cost estimate on the base bid by more than ten percent (10%).

3. SUBSTITUTION OF MATERIALS

Equivalent materials may be substituted for those referred to by brand name in the detailed specifications. The substitutions are to be listed by brand name on the substitution sheet in the proposal. The bidder shall furnish the Owner complete literature and specifications for each proposed equivalent substitution with the bid. Equivalent materials approved for use by the Owner shall be applied per manufacturer's recommendations. It shall be the sole judgment of the Owner as to the acceptability of the proposed substitution.

4. SUBCONTRACTS

The bidder is specifically advised that any person, firm or other party to whom it is proposed to award a subcontract under this contract must be acceptable to the Owner, and must abide by applicable terms and conditions contained herein. The attached List of Subcontractors must be completed and submitted with the bid. If no subcontractors are contemplated to be used by the bidder, then the form should state "None."

5. BID MODIFICATIONS

Any bidder may modify his bid by written communication at any time prior to the scheduled closing time for receipt of bids, providing such written communication is received by the Owner prior to closing time. The written communication shall not reveal the bid price but should provide the addition or subtraction or other modification so that the final prices or terms will not be known by the Owner until the sealed bid is opened.

6. QUALIFICATION OF BIDDER

The Owner may make such investigations as it deems necessary to determine the ability of the bidder to perform the work, and the bidder shall furnish to the Owner all such information and data for this purpose as the Owner may request, including without limitation completion and submission of the attached Resources & Experience of Bidder form. The Owner reserves the right to reject any bid if the information submitted by, or investigation of such bidder, fails to satisfy the Owner that the contractor will be able to timely, satisfactorily and professionally complete the work contemplated therein. Conditional bids will not be accepted.

7. BID SECURITY

Bidders are required to comply with current Ohio Law which provides that bid security shall be in the form of a bond for the full amount of the bid, with a corporate Surety approved by the Owner, or a certified check, cashier's check, or irrevocable letter of credit equal to ten percent (10%) of the amount of the bid. The Bid Guaranty form attached to these Bid Documents should be used.

All certified checks, bonds, etc., shall be made payable to the City of Hilliard, Ohio.

Such cash, checks or bid bonds shall be returned to all except the three lowest bidders within three (3) days after the opening of bids, and the remaining cash, checks, or bid bonds will be returned within ten (10) days after the Owner and the accepted bidder have executed the Contract, or if no award has been made within 60 (sixty) days of the opening of the bid, upon demand of the bidder at any time thereafter, so long as it has not been notified of the acceptance of its bid.

8. CONTRACT AWARD AND EXECUTION

After the bids are opened and read aloud, they will be compared on the basis of the summation of the products of the approximate quantities shown in the Bid Proposal by the total (sum of labor and material) price. In the event of a discrepancy between the total (sum of labor and material) price and the extensions, the total (sum of labor and material) price shall govern. The Owner shall also determine any alternate items as stipulated in the Bid Proposal to be performed and they will be included in the above summation. The right is reserved to reject any or all bids, to waive technicalities or to advertise for new bids, if in the judgment of the Owner, its best interests will be served thereby.

The award of the work, if it is awarded, will be made as soon as is reasonably possible after the opening of the bids, to the lowest and best bidder whose proposal complies with all the requirements prescribed. In no case will an award be made until all necessary investigations are made as to the qualification of the bidder to whom it is proposed to award the contract.

The Owner reserves the right to rescind the award of the work at any time before the execution of the Contract by all parties without incurring any liability. If the Contractor changes its position, economically or otherwise, after receiving a verbal or written notice of award and in reliance upon the Owner executing the Contract, the Contractor shall do so solely at its own risk and the Owner will not incur any liability from the Contractor's change of position.

The bidder to whom the work is awarded will be required to execute the Contract and to furnish the required Contract Bond and Certificates of Insurance within ten (10) calendar days from the date when the Notice of Award is communicated in writing to the successful bidder.

A Contract Bond in the amount of one-hundred percent (100%) of the Contract Price, with a corporate Surety approved by the Owner, will be required for the faithful performance of the Contract. The Contract Bond included herein should be used. The Contract Bond shall remain in effect until the expiration of the one-year guarantee period as assurance of the guarantee herein stipulated.

A bid guaranty, contract bond, payment bond, maintenance bond or any combination thereof executed by a surety not licensed, or a surplus lines company not approved, by the Superintendent of Insurance to execute such a bond in the State of Ohio shall be considered non-responsive and the bid shall be rejected.

9. INSURANCE

(a) Contractor's Liability Insurance. The Contractor shall purchase and maintain:

(i) Such liability and other insurance on an occurrence basis as will protect it and the Owner from claims set forth below which arise out of or result from the Contractor's execution of the work, whether such execution be by itself or by a Subcontractor or by anyone directly or indirectly employed by any of them, or by anyone for whose acts any of them may be liable:

(A) Claims under Workers' Compensation, occupational sickness or disease, disability benefit and other similar employee benefit acts;

(B) Claims for damages because of bodily injury, disease, illness, death or personal injury, and other claims usually covered by bodily injury liability insurance; and

(C) Claims for damages because of injury to or destruction of property and other claims usually covered by property damage liability insurance.

In order to comply with this requirement, the Contractor shall furnish and attach to each executed set of the Contract Documents, a copy of the Workers' Compensation Certificate showing that the Contractor has paid its Workers' Compensation insurance premium. Renewal certificates shall be furnished as necessary during the life of the Contract.

(ii) A Commercial General Liability policy and Business Automobile Liability policy, separately or combined, issued to the Contractor and protecting it from all claims for personal injury, including death, and all claims for destruction of or damage to property, arising out of or in connection with any operations under the Contract Documents, whether such operations be by the Contractor or by any Subcontractor under it, in the limits as set forth below. The policies shall be endorsed to provide that the General Aggregate Limit applies separately to each of the insured Contractor's projects.

(A) Contracts in the amounts of $100,000 or less shall require coverage in the amount of not less than $1 million general aggregate and $500,000 per occurrence.

(B) Contracts in excess of $100,000 shall require coverage in the amount of not less than $2 million general aggregate and $1 million per occurrence.

(C) The Business Automobile Liability policy shall cover owned, non-owned and hired vehicles and carry a $1 million coverage amount.

(b) Builder's Risk

Unless otherwise specified in the Contract Documents, the Contractor shall provide and maintain, during the progress of the Work and until the execution of the certificate of completion, a Builder's Risk insurance policy in the amount equal to 100% (one hundred percent) to cover all Work in the course of construction including without limitation falsework, temporary buildings, and structures and materials used in the construction process, stored on or off site, or while in transit. Such insurance shall insure against perils of fire and extended coverage and physical loss or damage including, without limitation, theft, vandalism, malicious mischief, earthquake, tornado, lightning, explosion, breakage of glass, flood, collapse and water damage. It shall also include debris removal, demolition occasioned by enforcement of any applicable legal requirement, and shall cover reasonable compensation for the Owner's services and expenses required to limit further loss and shall include provision to pay the reasonable extra costs of expediting temporary and/or permanent repairs to, or permanent

replacement of, damaged property. The policy shall specifically permit and allow for partial occupancy by the Owner prior to acceptance of the Work.

If the Contractor is involved solely in the installation of materials and equipment and not in new building construction, the Contractor shall purchase and maintain sufficient builder's risk insurance coverage in the amount equal to 100% (one hundred percent) of the cost of the materials and equipment.

(c) Umbrella Excess Liability Insurance to extend existing policies to the required limits will be accepted.

(d) Certificates of Insurance acceptable to the Owner and naming the Owner as an additional insured shall be filed with the Owner prior to execution of the Contract. In no event shall any failure of the Owner to demand a copy of the required Certificate of Insurance be construed as a waiver of the obligation of the Contractor to obtain insurance required to be purchased or maintained and naming the City as an additional insured. These certificates shall contain the following provision in the cancellation section by itself, without any other language or limitation: "Should any of the above described policies be cancelled before the expiration date thereof, the issuing insurer will provide the City with notice pursuant to the policy provisions."

(e) The Contractor shall maintain all insurance in the required amounts, without interruption, from the date of the execution of the Contract until the date of full completion. Failure to maintain the required insurance during the time specified shall be cause for termination of the Contract.

(f) Insurance policies required to be purchased and maintained by the Contractor may include a reasonable loss deductible, which shall be the responsibility of the Contractor to pay in the event of a loss, regardless whether the Contractor or the Owner, as the additional insured, files a claim.

(g) The prompt repair or reconstruction of the work as a result of an insured loss or damage shall be the Contractor's responsibility and shall be accomplished at no additional cost to the Owner.

10. POWER OF ATTORNEY

Attorneys-in-fact who sign bid bonds and/or contract bonds must file with each bond a certified and effectively dated copy of the power of attorney granting the authority for their signatures.

11. NOTICE TO PROCEED/TIME OF COMPLETION

After award of the Contract, the City will issue to the successful bidder a Notice to Proceed, which notice shall provide written direction to the Contractor as to what work shall be performed. The Bidder must agree to commence work within ten (10) calendar days after the date of the Contract (Date of the Contract is the date of execution by the Owner) and be complete by October 31, 2015. All work under the Contract, including all punch list items shall be fully complete by that time. The Owner reserves the right to issue a "Limited Notice to Proceed", which notice shall provide written direction to the Contractor as to a portion of the work that may or shall be commenced.

12. CONDITIONS OF WORK

Each bidder must be knowledgeable about the conditions relating to the construction of the Project and the employment of labor therefor. Failure to do so will not relieve a successful bidder of the obligation to furnish all material and labor necessary to carry out the provisions of the contract. Insofar as possible, the Contractor, in carrying out its work, must employ such methods or means as will not cause any interruption of, or interference with, the work of any other contractor.

13. ADDENDA AND INTERPRETATIONS

No oral interpretations of the meaning of the plans, specifications or other bid documents will be made to any bidder.

If any person contemplating submitting a bid for the proposed Project is in doubt as to the true meaning of any part of the Contract Documents, they may submit a written request for an interpretation thereof to Steve Mazer, at smazer@hilliardohio.gov with a copy to Brian Hagerty, P.E., Stantec Consulting Services at brian.hagerty@stantec.com. The person submitting the request will be responsible for its prompt delivery. Any interpretation of the Contract Documents will be made only by Addendum duly issued and a copy of such Addendum will be mailed, faxed, emailed, or delivered to each person receiving a set of such Contract Documents. Any such Addenda shall become part of the Contract Documents. The time for opening the bids shall be extended for one week if, within seventy-two (72) hours before the date set for the opening of bids, the Owner mails or otherwise furnishes to prospective bidders a modification of its plans, specifications, or cost estimate for the project. Requests for contract interpretation received within 72 hours prior to the time and date bids are due may be addressed by the City in an addendum at its sole discretion. The Owner will not be responsible for any other explanation or interpretation of the Contract Documents. Documents received after 2:00 PM on Friday will be marked received on the following Monday. Failure of any bidder to receive any such addenda or interpretation shall not relieve such bidder from any obligation under its bid as submitted.

14. LAWS AND REGULATIONS

The bidder's attention is directed to the fact that all applicable federal, state laws, municipal ordinances, and the rules and regulations of all authorities having jurisdiction over construction of the Project shall apply to the Contract throughout, and shall be deemed to be included in the Contract the same as though actually reproduced herein.

15. OBLIGATION OF BIDDER

At the time of the opening of bids, each bidder will be presumed to have inspected the site(s) and to have become thoroughly familiar with the plans and Contract documents (including all addenda). The failure or omission of any bidder to examine any form, instrument or document shall in no way relieve any bidder from any obligation in respect to its bid.

16. INCOME TAX

Pursuant to the laws of the City of Hilliard, there will be a tax collected by the City on all salaries, wages, commissions and other compensation earned by residents and non-residents of the City for work done or services performed or rendered in the City; and on the net profits earned on all businesses, professions, corporations or other activities, both resident and non-resident, as the result of work done or services performed or rendered in the City.

The current provisions for this tax are contained in Ordinance 94-10 of the City of Hilliard, Ohio and contained in Chapter 181 of the City's Codified Ordinances

Bidders are advised to become knowledgeable of their responsibilities under the aforementioned tax provisions. Information is available by contacting the Hilliard Tax Administrator, Hilliard Municipal Building, and by accessing the City's website at www.hilliardohio.gov, under the City Code.

If this Project is being undertaken with another municipality, Contractor shall also pay tax to the respective City for work performed in that municipality. Taxes will be collected based upon location of work.

17. CONFLICTS OF INTEREST

No officer, member or employee of the Owner and no member of its governing body, and no other public official of the governing body of the localities in which the Project is situated or being carried out who exercises any functions or responsibility in the review or approval of the undertaking or carrying out of this Project, shall participate in any decision relating to this Contract which affects a personal interest, or have any personal or pecuniary interest, directly or indirectly, in this Contract or the proceeds thereof.

18. OCCUPATIONAL SAFETY AND HEALTH ACT

Special attention of Bidders is also directed to the requirements of O.S.H.A. The successful Contractor will be required to observe all provisions of that Act, which are by reference included in the provisions of these specifications as if actually reproduced herein and shall be responsible for their enforcement.

19. ESTIMATE OF QUANTITIES

The quantities, if so listed in the Bid Schedule, Appendix A, are to be considered as approximate and are to be used for comparison of bids only. Quantities used for final payment will be based on actual used or calculated measurements, whichever is less. All field measurements of quantities used for payment shall be made by the Contractor in the presence of the Engineer or his authorized representative.

20. PAYROLL

The Contractor shall submit, on standard payroll forms, with original signature, a payroll for each week of the work. Before final payment will be made, these forms together with a letter certifying all payrolls have been submitted must be on file with the City.

21. RELEASE OF FINAL PAYMENT

The attention of the Contractor is directed to Section 19.6 and 20.1 of the following section titled "General Conditions."

Before the final payment will be released, the Contractor shall submit to the City of Hilliard an affidavit attesting under oath that all claims and obligations arising from performance of the work under this Contract have been paid, discharged or waived.

GENERAL CONDITIONS

1. DEFINITIONS
2. ADDITIONAL INSTRUCTIONS AND DETAIL DRAWINGS
3. SCHEDULES, REPORTS AND RECORDS
4. PLANS AND SPECIFICATIONS
5. SHOP DRAWINGS
6. MATERIALS, EQUIPMENT, SERVICES AND FACILITIES
7. INSPECTION AND TESTING
8. SUBSTITUTIONS
9. PATENTS
10. SURVEYS, PERMITS, REGULATIONS
11. PROTECTION OF WORK, PROPERTY, PERSONS
12. SUPERVISION BY CONTRACTOR
13. CHANGES IN THE WORK
14. CHANGES IN CONTRACT PRICE
15. TIME FOR COMPLETION AND LIQUIDATED DAMAGES
16. CORRECTION OF WORK
17. SUBSURFACE CONDITIONS
18. SUSPENSION OF WORK, TERMINATION AND DELAY
19. PAYMENTS TO CONTRACTOR
20. ACCEPTANCE OF FINAL PAYMENT AS RELEASE
21. CONTRACT SECURITY
22. ASSIGNMENTS
23. INDEMNIFICATION
24. SEPARATE CONTRACTS
25. SUBCONTRACTING
26. ENGINEER'S AUTHORITY
27. LAND AND RIGHTS-OF-WAY
28. GUARANTY
29. TAXES
30. NIGHT, HOLIDAY & SUNDAY WORK
31. CLEAN UP AFTER COMPLETION
32. SANITARY REGULATIONS
33. NON-DISCRIMINATION IN EMPLOYMENT/AFFIRMATIVE ACTION
34. REFERENCE STANDARDS
35. ESTIMATE OF QUANTITIES
36. "AS-BUILTS"
37. RECORDS & REPORTING REQUIREMENTS
38. DRUG-FREE WORKPLACE
39. CLAIMS
40. MEDIATION
41. GOVERNING LAW
42. STANDARD OF CARE

1. DEFINITIONS

1.1 Wherever used in the Contract Documents, the following terms shall have the meanings indicated which shall be applicable to both the singular and plural thereof.

1.2 ADDENDA – Written or graphic instruments issued prior to the execution of the Contract which modify or interpret the Contract Documents by additions, deletions, clarifications or corrections.

1.3 BID – The offer or proposal of the Bidder submitted on the prescribed form setting forth the prices for the work to be performed.

1.4 BIDDER – Any person, firm or corporation submitting a bid for the work.

1.5 BONDS – Bid Guaranty and Contract and other instruments of security, furnished by the Contractor and its surety in accordance with the Contract Documents.

1.6 CHANGE ORDER – A written order to the Contractor authorizing an addition, deletion or revision in the work within the general scope of the Contract Documents, or authorizing an

adjustment in the Contract price or Contract time based upon the addition, deletion or revision in the work to be performed.

1.7 CONTRACT DOCUMENTS – The Contract, including Notice to Contractors, Information for Bidders, description of Project, bid schedule, bid proposal, Bid Bond, Contract Bond, general conditions, special and detail specifications, plans, and addenda.

1.8 CONTRACT PRICE – The total monies payable to the Contractor under the terms and conditions of the Contract Documents.

1.9 CONTRACT TIME – The number of calendar days stated in the Contract Documents for the completion of work.

1.10 CONTRACTOR – The person, firm, partnership, association or corporation with whom the owner has executed the Contract.

1.11 PLANS – The part of the Contract Documents which show the characteristics and scope of the work to be performed and which have been prepared or approved by the Engineer.

1.12 ENGINEER – The City Engineer of Hilliard, Ohio or its designated Project representative.

1.13 FIELD ORDER – A written order affecting a change in the work not involving an adjustment in the Contract Price or an extension of the Contract Time, issued by the Engineer to the Contractor during the construction.

1.14 NOTICE OF AWARD – The written notice of the acceptance of the bid from the Owner to the bidder.

1.15 NOTICE TO PROCEED – Written communication issued by the Owner to the Contractor authorizing it to proceed with the work and establishing the date of commencement of the work.

1.16 OWNER – The City of Hilliard, Ohio.

1.17 PROJECT – The subject of the Contract Documents which the Owner has hired Contractor to perform and complete.

1.18 SHOP DRAWINGS – All drawings, diagrams, illustrations, brochures, schedules and other data prepared by the Contractor, a sub-contractor, manufacturer, supplier or distributor, which illustrate how specific portions of the work shall be fabricated or installed.

1.19 SPECIFICATIONS – A part of the Contract Documents consisting of written descriptions of a technical nature of materials, equipment, construction systems, standards and workmanship.

1.20 SUB-CONTRACTOR – An individual, firm or corporation having a direct contract with the Contractor or with any other sub-contractor for the performance of a part of the work at the site.

1.21 SPECIAL SPECIFICATION – Modifications to general conditions and supplemental detail specifications.

1.22 SUPPLIERS – Any person, supplier or organization who supplies materials or equipment for the work, including that fabricated to a special design, but who does not perform labor, other than delivery, at the site.

1.23 WORK – All labor necessary to complete the Project and produce the construction required by the contract documents, and all materials and equipment incorporated or to be incorporated in the Project.

1.24 WRITTEN NOTICE – Any notice to any party of the Contract relative to any part of the Contract, in writing and considered delivered and the service thereof completed, when posted by certified or registered mail to such party at its last given address, delivered in person to such party or its authorized representative, faxed to such party or its authorized representative with receipt confirmation; or e-mailed to such party or its authorized representative with receipt confirmation.

2. ADDITIONAL INSTRUCTIONS AND DETAIL DRAWINGS

2.1 The Contractor may be furnished additional instructions and detail drawings, by the Engineer, as necessary to carry out the work required by the Contract Documents.

2.2 The additional drawings and instruction thus applied will become a part of the Contract Documents. The Contractor shall carry out the work in accordance with the additional detail drawings and instructions.

3. SCHEDULES, REPORTS AND RECORDS

3.1 The Contractor shall submit to the Owner such schedule of quantities and costs, progress schedules, payrolls, reports, estimates, records and other data where applicable, as are required by the Contract Documents for the work to be performed.

3.2 Prior to the pre-construction meeting, the Contractor shall submit construction progress schedules showing the order in which the Contractor proposes to carry on the work, including dates at which the Contractor will start the various parts of the work, estimated date of completion of each part and, as applicable, the following:

3.2.1 The dates at which special detail drawings will be required; and

3.2.2 Respective dates for submission of shop drawings, the beginning of manufacture, the testing and the installation of materials, supplies and equipment.

3.3 The Contractor shall also submit a schedule of payments that it anticipates to invoice during the course of completing the Project.

4. PLANS AND SPECIFICATIONS

4.1 The intent of the plans and specifications is that the Contractor shall furnish all labor, materials, tools, equipment, and transportation necessary for the proper execution of the work in accordance with the Contract Documents and all incidental work necessary to complete the Project in an acceptable manner, ready for use, occupancy or operation by the Owner.

4.2 In the event of a conflict between the plans and specifications, the plans shall govern. Figure dimensions on plans shall govern over scale dimensions, and detailed plans shall govern over general plans.

4.3 Discrepancies discovered by Contractor between the plans and specifications and site conditions or any inconsistencies or ambiguities in the plans or specifications shall be immediately reported to the Engineer, in writing, who shall promptly correct such inconsistencies or ambiguities in writing. Work done by the contractor after discovering such discrepancies, inconsistencies or ambiguities and prior to the Engineer's approval or corrections, shall be done at the Contractor's risk and Contractor may have to redo the work at its own expense and without compensation by Owner.

4.4 The plans and specifications prepared for this Project are intended to be complete. Anything called for in the specifications and not shown on the plans or shown on the plans and not called for in the specifications, must be furnished by the Contractor as part of the Project as though appearing in both.

5. **SHOP DRAWINGS**

5.1 The contractor shall provide shop drawings as may be necessary for the prosecution of the work as required by the Contract Documents. The Engineer shall promptly review all shop drawings. The Engineer's approval of any shop drawing shall not release the Contractor from responsibility for deviations from the Contract Documents. The approval of any shop drawing which substantially deviates from requirements in the Contract Documents shall be evidenced by a written change order.

5.2 When submitted for the Engineer's review, shop drawings shall bear the Contractor's certification that the Contractor has reviewed, checked and approved the shop drawings and that they are in conformance with the requirements of the Contract Documents.

5.3 Portions of the work requiring a shop drawing or sample submission shall not begin until the shop drawing or submission has been approved by the Engineer. A copy of each approved shop drawing and each approved sample shall be kept in good order by the Contractor at the site and shall be available to the Engineer.

6. **MATERIALS, EQUIPMENT, SERVICES, AND FACILITIES**

6.1 It is understood that, except as otherwise specifically stated in the Contract Documents, the Contractor shall provide and pay for all materials, labor, tools, equipment, water, light, power, transportation, supervision, temporary construction of any nature, and all other services and facilities of any nature whatsoever necessary to execute, complete, and deliver the work within the specified time.

6.2 Materials and equipment shall be so stored as to insure the preservation of their quality and fitness for work. Stored materials and equipment to be incorporated in the work shall be located so as to facilitate prompt inspection.

6.3 Manufactured articles, materials and equipment shall be applied, installed, connected, erected, used, cleaned and conditioned as directed by the manufacturer. Unless specifically stated otherwise, all materials and equipment incorporated in the work shall be new, unused, and undamaged.

6.4 Materials, supplies and equipment shall be in accordance with samples submitted by the Contractor and approved by the Engineer.

6.5 Materials, supplies or equipment to be incorporated into the work shall not be purchased by the Contractor or the sub-contractor subject to a chattel mortgage or under a conditional sale contract or other agreement by which an interest is retained by the seller.

6.6 All steel and iron products must meet the requirements of ODOT C&MS 106.09.

7. **INSPECTION AND TESTING**

7.1 All materials and equipment used in the construction of the Project shall be subject to adequate inspection and testing in accordance with generally accepted standards, as required and defined in the Contract Documents.

7.2 The owner shall provide all inspection and testing services not included as a part of the work and services to be provided by Contractor.

7.3 The Contractor shall provide, at its expense, the necessary testing and inspection services required by the Contract Documents.

7.4 If the Contract Documents, laws, ordinances, rules, regulations or orders of any public authority having jurisdiction require any work to specifically be inspected, tested, or approved

by someone other than the Contractor, the Contractor will give the Engineer timely notice of readiness. The Contractor will then furnish the Engineer the required certificates of inspection, testing or approval.

7.5 Inspections, tests or approvals by the Engineer or others shall not relieve the Contractor from its obligations to perform the work in accordance with the requirements of the Contract Documents.

7.6 The Owner and its representatives and agents will at all times have access to the work. In addition, authorized representatives and agents of any participating Federal or State agency shall be permitted to inspect all work, materials and other relevant data and records. The Contractor will provide proper facilities for such access and observation of the work and also for any inspection, or testing thereof.

7.7 No work shall be covered prior to inspection, and approval to do so is required by the Engineer or its authorized representative. If any work is covered without inspection and without permission to do so, the Contractor, upon request of the Engineer or its authorized representative, shall uncover the work for inspection, at its own expense.

7.8 If the Engineer considers it necessary or advisable that covered work be inspected or tested by others, the Contractor at the Engineer's request, will uncover, expose or otherwise make available for observation, inspection or testing as the Engineer may require, that portion of the work in question, furnishing all necessary labor, materials, tools, and equipment. If it is found that such work is defective, the Contractor will bear all the expenses of such uncovering, exposure, observation, inspection and testing and of satisfactory reconstruction.

8. SUBSTITUTIONS

8.1 Whenever a material, article or piece of equipment is identified on the plans or specifications by reference to brand name or catalogue number, it shall be understood that this is referenced for the purpose of defining the performance or other salient requirements and that other products of equal capacities, quality and function may be considered. The Contractor may recommend the substitution of a material, article, or piece of equipment of equal substance and function, for those referred to in the Contract Documents by reference to brand name or catalogue number, and if, in the sole discretion of the Engineer, such material, article, or piece of equipment is of equal substance and function to that specified, the Engineer may approve its substitution and use by the Contractor. Any cost differential shall be deductible from the Contract Price and Contract Documents shall be appropriately modified by change order. The Contractor warrants that if substitutes are approved, no major changes in the function or general design of the Project will result. Incidental changes or extra component parts required to accommodate the substitute will be made by the Contractor without a change in the Contract Price or Contract Time.

8.2 In considering the suitability of substitutes, in addition to equality of substance and function, economy of maintenance and operation, availability of repair parts and duration of life shall be considered. In those instances in which a particular brand or make of material, device or equipment is required to be stated by the Contractor in the bid, the Contractor will be required to provide the item so indicated unless approved by the Engineer, by field order or change order.

9. PATENTS

9.1 The Contractor shall pay all applicable royalties and license fees. The Contractor shall defend all suits or claims for infringement of any patent rights and shall hold and save the Owner harmless from loss on account thereof. If the Contractor has reason to believe that the design, process or product specified is an infringement of a patent, the Contractor shall be responsible for such loss unless the Contractor promptly gives such information to the Engineer.

10. SURVEYS, PERMITS, REGULATIONS

10.1 The Owner shall furnish all boundary surveys and establish all baselines for locating the principal component parts of the work together with a suitable number of bench marks adjacent to the work as shown in the Contract Documents. From the information provided by the Owner, unless otherwise specified in the Contract Documents, the Contractor shall develop and make all detail surveys needed for construction, such as slope stakes, batter boards, stakes for pole locations and other working points, lines, elevations and cut sheets.

10.2 The Contractor shall carefully preserve bench marks, reference points and stakes and, in the case of willful or careless destruction, the Contractor shall be charged with the resulting expense and shall be responsible for any mistakes that may be caused by their unnecessary loss or disturbance.

10.3 Permits and licenses of a temporary nature necessary for the prosecution of the work shall be secured and paid for by the Contractor unless otherwise stated in the special specifications. Permits, licenses, and easements for permanent structures or permanent changes in existing facilities shall be secured and paid for by the Owner, unless otherwise specified. The Contractor shall give all notices and comply with all laws, ordinances, rules and regulations bearing on the conduct of the work as drawn and specified. If the Contractor observes that the Contract Documents are at variance therewith, the Contractor shall promptly notify the Engineer in writing, and any necessary changes shall be adjusted as provided in section 13, Changes in the Work.

11. PROTECTION OF WORK, PROPERTY, AND PERSONS

11.1 The Contractor will be responsible for initiating, maintaining, and supervising all safety precautions and programs in connection with the work. The Contractor will take all necessary precautions for the safety of, and will provide the necessary protection to prevent damage, injury, or loss to all employees, and other persons who may be affected thereby, all the work and all materials or equipment to be incorporated therein, whether in storage on or off the site, and other property at the site or adjacent thereto, including trees, shrubs, lawns, walks, pavements, roadways, structures, and utilities not designated for removal, relocation, or replacement in the course of construction.

11.2 The Contractor will comply with all applicable laws, ordinances, rules, regulations, and orders of any public body having jurisdiction. The Contractor will erect and maintain, as required by the conditions and progress of the work, all necessary safeguards for safety and protection. The Contractor will notify owners of adjacent utilities when prosecution of the work may affect them. The Contractor will remedy all damage, injury, or loss to any property caused, directly or indirectly, in whole or in part, by the Contractor, any subcontractor or anyone directly or indirectly employed by them or anyone for whose acts any of them may be liable.

11.3 In emergencies affecting the safety of persons or the work or property at the site or adjacent thereto, the Contractor, without special instruction or authorization from the engineer or owner, shall act to prevent threatened damage, injury or loss. The Contractor will give the engineer prompt written notice of any significant changes in the work or deviations from the Contract Documents caused thereby, and request that a change order be issued covering the changes and deviations involved, which may be issued upon just determination by the Owner.

11.4 The locations of utilities and structures, both surface and subsurface, are shown on the plans from data available at the time of survey and are not certified by the Owner to be complete or correct. *The exact location and protection of utilities and structures is the responsibility of the Contractor.* During construction, the Contractor shall use diligence in protecting from damage, all existing utilities and structures whether shown on the plans or not. If damage is caused, the Contractor shall be responsible for the repair or restoration of same in accordance with the directions of the Engineer and for any resulting contingent damage, including financial claims

11.5 The Contractor will be held responsible for any and all materials or work to the full amount of payments made thereon, and will be required to make good, at its own cost, any injury or damage which said materials or work may sustain from any source or cause whatsoever, before final acceptance thereof. During periods of wet, freezing or severe winter weather, the Contractor shall provide the necessary drainage, heating facilities and other protection for the work.

If upon notification, the Contractor fails to take positive action to correct the drainage, heating or protection deficiencies within 24 hours, the Owner will do so at the Contractor's expense. The cost of correcting the deficiencies will be deducted from the Contract Price.

12. SUPERVISION BY CONTRACTOR

12.1 The Contractor will supervise and direct the work and will be solely responsible for the means, methods, techniques, sequences and procedures of construction. The Contractor will employ and maintain a qualified supervisor or superintendent who shall have been designated in writing by the Contractor as the Contractor's representative at the site. The supervisor shall have full authority to act on behalf of the Contractor and all communications given to the supervisor shall be as binding as if given to the Contractor. The supervisor shall be present and on the site at all times as required to perform adequate supervision and coordination of the work.

13. CHANGES IN THE WORK

13.1 The Owner may at any time, as the need arises, order changes within the scope of the work without invalidating the Contract. If such changes increase or decrease the amount due under the Contract Documents, or in the time required for performance of the work, an equitable adjustment shall be authorized by Change Order.

13.2 The Engineer also may, at any time, by issuing a Field Order, make changes in the details of the work. The Contractor shall proceed with the performance of any changes in the work so ordered by the Engineer unless the Contractor believes that such field order entitles him to change a Contract Price or Contract Time, or both, in which event the Contractor shall give the Engineer written notice thereof within seven (7) days after the receipt of the ordered change. Thereafter, the Contractor shall document the basis for the change in Contract Price or Contract Time within fourteen days (14) days. However, the Contractor shall not execute such changes pending the receipt of an executed Change Order or further written instructions from the Owner.

14. CHANGES IN CONTRACT PRICE

14.1 The Contract Price may be changed only by a Change Order. The value of any work covered by a Change Order or of any claim for increase or decrease in the Contract Price shall be determined by one or more of the following methods in the order of precedence listed below:

(a) Unit prices previously approved.

(b) An agreed lump sum.

(c) The actual cost for labor, direct overhead, materials, supplies, equipment and other services necessary to complete the work. In addition, there shall be added an amount to be agreed upon, but not to exceed fifteen (15) percent of the actual cost of the work to cover the cost of general overhead and profit.

15. TIME FOR COMPLETION AND LIQUIDATED DAMAGES

15.1 The date of beginning and time for completion of the work are essential conditions of the Contract Documents and the work shall be commenced on a date specified in the notice to proceed.

15.2 The Contractor will proceed with the work at a rate of progress which will insure full completion within the Contract Time. It is expressly understood and agreed, by and between the Contractor and the Owner, that the time stated in the Contract for the completion of the work described herein is a reasonable time, taking into consideration the nature of the work, its level of complexity, the average climatic and economic conditions and other factors prevailing in the locality of the work.

15.3 If the Contractor fails to complete the work within the Contract Time, or extension of time granted by the Owner, then the Contractor shall pay to the Owner the amount of liquidated damages as specified in paragraph 15.5 for each calendar day that the Contractor shall be in default after the time stipulated above and for all expenses of engineering and inspection after the date set for completion. The Owner shall have the right to deduct all or any unpaid balance of said liquidated damages and engineering and inspection expenses from any money due the Contractor. The amount still owing, if any, after such deduction, shall be paid on demand by the Contractor or his Surety. Such payment shall not relieve the Contractor or the Surety from any other obligations under the Contract.

15.4 The Contractor shall not be charged with liquidated damages or any excess cost when the delay in completion of the work is due to the following and the Contractor has promptly given written notice of such delay to the Owner or Engineer:

15.4.1 Any preference, priority or allocation order authorized and issued by the Owner which differs from the Contractor's bid.

15.4.2 Unforeseeable causes beyond the control and without the fault or negligence of the Contractor, including but not restricted to, acts of God, or the public enemy, fires, floods, medical epidemics, quarantine restrictions, freight embargoes, and extreme, unforeseeable weather; and

15.4.3 Any delays of sub-contractors occasioned by any of the acts specified in paragraphs 15.4.1 and 15.4.2.

15.5 **SCHEDULE OF LIQUIDATED DAMAGES**

The Contractor shall complete the work within the time of completion stated in the Information for Bidders and on or before the calendar date specified in the Notice to Proceed, or on or before a later date determined and agreed to in writing by the Owner.

If the Contractor fails to complete the work within the time allowed in the Notice to Proceed or within an extended time granted by the Owner, there shall be for each calendar day that any work shall remain uncompleted after the completion date or extended completion date the sum specified hereinafter deducted from any money due the Contractor, not as a penalty but as liquidated damages. The City has adopted the ODOT Construction and Specifications Manual schedule of liquidated damages.

Original Contract Amount (Total Amount of the Bid)		Amount of Liquidated Damages To Be Deducted for Each Calendar Day of Overrun in Time
From More Than	To and Including	Amount
$0	$500,000	$750.00
$500,000	$2,000,000	$1,000.00
$2,000,000	$10,000,000	$1,300.00
$10,000,000	$50,000,000	$1,400.00

Over $50,000,000 ....$1,900.00

Nothing contained in this Paragraph 15.5 shall preclude the Owner's recovery from Contractor of actual damages.

16. CORRECTION OF WORK

16.1 The Contractor shall promptly remove from the premises all work rejected by the Engineer for failure to comply with the Contract Documents, whether incorporated in the construction or not, and the Contractor shall promptly replace and re-execute the work in accordance with the Contract Documents and without expense to the Owner and shall bear the expense of making good all work of other contractors destroyed or damaged by such removal and replacement.

16.2 All removal and replacement work shall be done at the Contractor's expense. If the Contractor does not take action to remove such rejected work within ten (10) days after receipt of written notice, the Owner may remove such work and store the materials at the expense of the Contractor.

17. SUBSURFACE CONDITIONS

17.1 The Contractor shall promptly, and before such conditions are disturbed, except in the event of an emergency, notify the owner by written notice of:

17.1.1 Subsurface or latent physical conditions at the site differing materially from those indicated in the contract documents; or

17.1.2 Unknown physical conditions at the site, of an unusual nature, differing materially from those ordinarily encountered and generally recognized as inherent in work of the character provided for in the Contract Documents.

17.2 The Owner shall promptly investigate the conditions, and if it is found that such conditions do so materially differ and cause an increase or decrease in the cost of, or in the time required for, performance of the work, the Owner may agree to an equitable adjustment which would then be reflected in the Contract Documents by a Change Order. Any claim of the Contractor for adjustment hereunder shall only be considered if the Contractor has given the required written notice; provided that the Owner may, if the Contractor determines the facts so justify, consider and adjust any such claims asserted before the date of final payment.

17.3 <u>Work Stoppage Due to Hazardous Materials</u>

17.3.1 If the Contractor encounters material the Contractor reasonably believes to be, or contain, a hazardous material, which has not been rendered harmless, the Contractor shall immediately stop Work in the affected area and verbally report the condition to the Engineer, and within 1 business day deliver written notice of the condition to the Engineer.

17.3.2 The Engineer will promptly determine the necessity of the Owner retaining a qualified environmental consultant to evaluate the suspected hazardous material and to issue a related written report. Where appropriate, the Owner will engage a licensed abatement contractor to remove the material or render it harmless as directed.

17.3.3 The Contractor shall resume Work in the affected area upon written notice from the Engineer that (1) the suspect material was evaluated and found not to be or contain a hazardous material, or (2) the suspect material has been removed or rendered harmless.

17.3.4 If the Contractor knowingly or negligently proceeds with the Work in an area where a hazardous material exists and has not been rendered harmless, the Contractor shall be solely responsible for all related claims, damages, losses, and expenses, including, but not limited to, attorneys' fees, arising out of or resulting from performing the Work in the affected area.

18. SUSPENSION OF WORK, TERMINATION, AND DELAY

18.1 The Owner may suspend the work or any portion thereof for a period of not more than ninety (90) days or such further time as agreed upon by the Contractor, by written notice to the Contractor and the Engineer. The notice shall fix the date on which work shall be resumed. The Contractor will resume that work on the date so fixed. The Owner will adjust the Contract Price or an extension of the Contract Time, or both, directly attributable to any suspension.

18.2 Without prejudice to any other right or remedy and after giving the Contractor and the surety a minimum of seven (7) calendar days from delivery of written notice, the Owner may terminate the services of the Contractor for any of the following: (a) the Contractor is adjudged bankrupt or insolvent or a general assignment is made for the benefit of the creditors or a trustee or receiver is appointed for the contractor or for any of its property; (b) the Contractor files a petition to take advantage of any debtor's act or to reorganize under the bankruptcy or applicable laws; (c) the Contractor repeatedly fails to supply sufficient skilled workers or suitable materials or equipment; (d) the Contractor fails to make prompt payments to sub-contractors for labor, materials or equipment; (e) the Contractor disregards laws, ordinances, rules, regulations or orders of any public body having jurisdiction of the work; or (f) the Contractor disregards the authority of the Engineer, or otherwise violates any provision of the Contract Documents. In the event that the Owner terminates the services of the Contractor pursuant to this paragraph 18.2, the Owner may thereupon take possession of the Project and of all materials, equipment, tools, construction equipment and machinery thereon, owned by the Contractor, and finish the work by whatever method the owner deems expedient. In such case the Contractor shall not be entitled to receive any further payment until the work is finished. If the unpaid balance of the Contract Price exceeds the direct and indirect costs of completing the Project, including compensation for additional professional services, such excess shall be paid to the Contractor. If such costs exceed such unpaid balance, the Contractor will pay the difference to the Owner. Such costs incurred by the owner will be determined by the Engineer and incorporated in a Change Order.

18.3 Where the Contractor's services have been so terminated by the Owner, said termination shall not affect any right of the Owner against the Contractor then existing or which may thereafter accrue. Any retention of payment of monies by the Owner due the Contractor will not release the Contractor from compliance with the Contract Documents.

18.4 After seven (7) calendar days from delivery of a written notice to the Contractor, the Owner may, without cause and without prejudice to any other right or remedy, elect to abandon the Project and terminate the Contract. In such case, the Contractor shall be paid for all work executed.

18.5 If, through no act or fault of the Contractor, the work is suspended for a period of more than ninety (90) days by the Owner or under an order of court or other public authority, or the Engineer fails to act on any request for payment within thirty (30) days after it is submitted, or the Owner fails to pay the Contractor substantially the sum approved by the Engineer within thirty (30) days of its approval and presentation, then the Contractor may, after ten (10) calendar days from delivery of a written notice to the Owner and Engineer, terminate the Contract and recover from the Owner payment for all work executed and all expenses sustained. In addition and in lieu of terminating the Contract, if the Engineer has failed to act on a request for payment or if the Owner has failed to make any payment as aforesaid, the Contractor may, upon ten (10) calendar days written notice to the Owner and the Engineer, stop the work until the Contractor has been paid all amounts then due, in which event and upon resumption of the work, written Change Orders shall be issued for adjusting the Contract Price or extending the Contract Time or both to compensate for the costs and delays attributable to the stoppage of the work.

18.6 If the performance of all or any portion of the work is suspended, delayed, or interrupted as a result of a failure of the Owner or Engineer to act within the time specified in the Contract Documents, or if no time is specified, within a reasonable time, an adjustment in the Contract

Price or an extension of the Contract Time, or both, shall be made by Change Order to compensate the Contractor for the costs and delays necessarily caused by the failure of the Owner or Engineer.

18.6.1 Notwithstanding any other provision of the Contract Documents to the contrary, the Contractor shall not be entitled to an increase in the Contract Price, or an extension of the Contract Time, or both:

18.6.1.1 on account of the impact of any normal adverse weather on any of the Work or on account of the impact of any abnormal adverse weather on Work not on the critical path;

18.6.1.2 to the extent that a delay occurs concurrently with a delay attributable to the Contractor; or

18.6.1.3 on account of the delay of any Work not on the critical path.

18.6.2 Notwithstanding any other provision of the Contract Documents to the contrary, the Contractor shall not be entitled to an increase in the Contract Price or any type of damages on account of a delay in the commencement or progress of Work on the critical path unless (1) the delay is caused by the Owner and (2) the delay was not authorized or permitted under the Contract.

18.6.3 If the Owner is adjudged to have improperly terminated the Contract under this Paragraph 18, the termination will be deemed to have been a termination under Paragraph 18.4.

19. PAYMENTS TO CONTRACTOR

19.1 At least ten (10) days before each progress payment falls due (but not more often than once a month), the Contractor shall submit to the Engineer a partial payment estimate filled out and signed by the Contractor covering the work performed during the period covered by the partial payment estimate and supported by such data as the Engineer may reasonably require. All pay requests shall be submitted along with the completed form for payment located in the bidding documents If payment is requested on the basis of materials and equipment not incorporated in the work but delivered and suitably stored at or near the site, the partial payment estimate shall also be accompanied by such supporting data, satisfactory to the Owner as will establish the Owner's title to the material and equipment and protect its interest therein, including applicable insurance. The Engineer will, within ten (10) days after receipt of each partial payment estimate, either indicate in writing to the Contractor that payment is approved and shall present the partial payment estimate to the Owner, or the Engineer will return the partial payment estimate to the Contractor as disapproved, indicating in writing the reasons for refusing to approve payment. In the latter case, the Contractor may make the necessary corrections and resubmit the partial payment estimate. The Owner will, within thirty (30) days of presentation of an approved partial payment, pay the Contractor a progress payment on the basis of the approved partial payment estimate. The Owner shall retain eight percent (8%) of the amount of each payment until fifty percent (50%) of the work is completed. All labor performed and material incorporated in the work after the job is fifty percent (50%) completed shall be paid for at the rate of one hundred percent (100%) of the amount of additional labor and material furnished and approved and the amount previously retained shall be deposited in an escrow account. The funds in the escrow account are to be paid the Contractor at the same time and in the same manner as specified for payment of the retained amount in paragraph 19.5 of these General Conditions. Payment for material and equipment delivered and not incorporated shall be at the rate of ninety-two percent (92%) of invoice value of such material and equipment. Partial payment to the Contractor for work performed under a lump sum price shall be based on the schedule of quantities and cost submitted as required by paragraph 3.1 of these General Conditions.

19.2 The request for payment may also include an allowance for the cost of such major materials and equipment which are suitably stored either at or near the site.

19.3 Prior to substantial completion, the Owner, with the approval of the Engineer and with the concurrence of the Contractor, may use any completed portions of the work. Such use shall not constitute an acceptance of such portions of the work.

19.4 The Owner shall have the right to enter the premises for the purpose of doing work not covered by the Contract Documents. This provision shall not be construed as relieving the Contractor of the sole responsibility for the care and protection of the work, or the restoration of any damaged work except such as may be caused by agents or employees of the Owner.

19.5 Upon completion and acceptance of the work, the Engineer shall issue a certificate attached to the final payment request that the work has been accepted under the conditions of the Contract Documents. The entire balance found to be due the Contractor, including the retained percentages, but except such sums as may be lawfully retained by the Owner, shall be paid to the Contractor within thirty (30) days of completion and acceptance of the work.

19.6 The Contractor, its agents, successors and assigns, shall indemnify and save the Owner and the Owner's agents harmless from any and all claims arising out of the lawful demands of Sub-Contractors, laborers, workers, mechanics, materialmen, and furnishers of machinery and parts thereof, equipment, tools and all supplies incurred in the performance of the Work. The Contractor shall, at the Owner's request, furnish satisfactory evidence that all obligations and claims of the nature designated above have been paid, discharged, or waived. If the Contractor fails to do so the Owner may, after having notified the Contractor, either pay unpaid bills or withhold from the Contractor's unpaid compensation, a sum of money deemed reasonably sufficient to pay any and all such lawful claims until satisfactory evidence is furnished that all liabilities have been fully discharged, whereupon payment to the Contractor shall be resumed, in accordance with the terms of the Contract Documents. In no event shall the provisions of this sentence be construed to impose any obligation upon the Owner to any of the Contractor, its surety, or any third party. In paying any unpaid bills of the Contractor, any payment so made by the Owner shall be considered as a payment made under the Contract Documents by the Owner to the Contractor and the Owner shall not be liable to the Contractor for any such payments made in good faith.

20. ACCEPTANCE OF FINAL PAYMENT AS RELEASE

20.1 The acceptance by the Contractor of final payment shall operate as a release to the Owner of all claims and all liability to the Contractor other than claims in stated amounts as may be specifically excepted by the Contractor for all things done or furnished in connection with this work and of others relating to or arising out of this work. Any payment, however, final or otherwise, shall not release the Contractor or his sureties from any obligations under the Contract Documents or the Bonds.

21. CONTRACT SECURITY

21.1 The Contractor shall within ten (10) days after the receipt of the notice of award furnish the Owner with a Contract in a penal sum equal to the amount of the Contract Price, conditioned upon the performance by the Contractor of all undertakings, covenants, terms, conditions and agreements of the Contract Documents, and upon the prompt payment by the Contractor to all persons supplying labor and materials in the prosecution of the work provided by the Contract Documents. Such bond shall be executed by the Contractor and a corporate bonding company licensed to transact such business in the State of Ohio, and named on the current list of "Surety Companies Acceptable on Federal Bonds" as published in the Treasury Department Circular Number 570. The expense of the Contract Bond shall be borne by the Contractor and not reimbursable under this Contract. If at any time a surety on any such bond is declared bankrupt or loses its right to do business in Ohio or is removed from the list of Surety Companies accepted on Federal Bonds, the Contractor shall, within ten (10) days after notice from the Owner to do so, substitute an acceptable bond(s) in such form and sum and signed by such other surety or sureties as may be satisfactory to the Owner. The premiums on such bond shall be paid by the Contractor. No further payments shall be deemed due nor shall be made until the new surety or sureties shall have furnished an acceptable bond to the

owner. The contract bond shall name the Ohio Department of Transportation as an additional oblige.

22. ASSIGNMENTS

22.1 Neither the Contractor nor the Owner shall sell, transfer, assign or otherwise dispose of the Contract or any portion thereof, or of their right, title or interest therein, or obligations thereunder, without written consent of the other party.

23. INDEMNIFICATION

23.1 To the fullest extent permitted by applicable law, the Contractor, its agent, successors and assigns, shall indemnify, defend, and hold harmless the Owner, the Owner's Engineer and their agents, representatives, consultants and employees and the Owner's elected officials and officers, from and against all claims, costs, damages, losses, fines, penalties, and expenses (including but not limited to all fees and charges of contractors, engineers, architects, attorneys, and other professionals and all court, arbitration, or other dispute-resolution costs) arising out of or in connection with the Project, but only to the extent caused by the negligent acts, errors, or omissions of the Contractor or a person or entity for whom the Contractor may be liable.

23.2 In any and all claims against the Owner or the Engineer, or any of their agents or employees, by any employee of the Contractor, any Sub-Contractor, anyone directly or indirectly employed by any of them, or anyone for whose acts any of them may be liable, the indemnification obligation shall not be limited in any way by any limitation on the amount or type of damages, compensation or benefits payable by or for the Contractor or any Sub-Contractor under workers compensation acts, disability benefit acts or other employee benefits acts.

23.3 The Contractor's indemnification obligation under Paragraph 23.1 will not be limited by any insurance policy provided or required in connection with the Project.

23.4 The Contractor's obligations under Paragraph 23.1 shall not negate, abridge, or reduce other rights or obligations of indemnity, which would otherwise exist under applicable law.

23.5 The Contractor's indemnification obligation under Paragraph 23.1 will survive termination of the Contract and final acceptance of the Work.

23.6 The Owner may deduct from the Contract Price the claims, damages, losses, fines, penalties, and expenses for which the Contractor is liable under Paragraph 23.1. If those claims, damages, losses, fines, penalties, and expenses exceed the unpaid balance of the Contract Price, the Contractor shall immediately pay the difference to the Owner.

24. SEPARATE CONTRACTS

24.1 The Owner reserves the right to let other contracts in connection with this Project. The Contractor shall afford other contractors reasonable opportunity for the introduction and storage of their materials and the execution of their work, and shall properly connect and coordinate all work with theirs. If the proper execution or results of any part of the Contractor's work depends upon the work of any other contractor, the Contractor shall inspect and promptly report to the Engineer any defects in such work that render it unsuitable for such proper execution and results.

24.2 The Owner may perform additional work related to the Project, or may let other contracts containing provisions substantially similar to these. The Contractor will afford the other contractors who are parties to such contracts (or the Owner, if performing the additional work), reasonable opportunity for the introduction and storage of materials and equipment and the execution of work, and shall properly connect and coordinate all work with theirs.

24.3 If the performance of additional work by other contractors or the Owner is not noted in the Contract Documents prior to the execution of the Contract, written notice thereof shall be given to the Contractor prior to starting any such additional work. If the Contractor believes that the performance of such additional work by the work of others involves additional expense or an extension of the Contract Time, a claim may be made through a request for a Change Order pursuant to paragraph 14 “Changes in Contract Price” in the General Standards.

25. SUBCONTRACTING

25.1 The Contractor may utilize the services of specialty sub-contractors on those parts of the work which, under normal contracting practices, are performed by specialty sub-contractors. All sub-contractors must be listed with the bid submitted by the Contractor on the form provided with a description of the type of work they will be performing. The Owner reserves the right to reject any or all proposed sub-contractors listed thereon before the bid is awarded. However, the Owner will give the bidder an opportunity to either (a) withdraw the bid or (b) substitute sub-contractors who are acceptable to the Owner, provided such substitution of sub-contractors does not change the amount of the bid. The Owner will not reject any listed sub-contractor after the Contract award has been made by the Owner.

25.2 The Contractor shall not award work to sub-contractor(s) in excess of forty-nine (49%) percent of the original Contract Price.

25.3 The Contractor shall be fully responsible to the Owner for the acts and omissions of its sub-contractor(s), and of persons either directly or indirectly employed by it, as it is for the acts and omissions of persons directly employed by it.

25.4 The Contractor shall cause appropriate provisions to be inserted in all sub-contracts relative to the work to bind sub-contractors to the Contractor by the terms of the Contract documents insofar as applicable to the work of sub-contractors and to give the Contractor the same power as regards to terminating any subcontract that the owner may exercise over the Contractor under any provisions of the Contract Documents.

25.5 Nothing contained in this Contract shall create any contractual relation between any sub-contractor and the Owner.

26. ENGINEER’S AUTHORITY

26.1 The Engineer shall act as the Owner’s representative during the construction period. The Engineer shall answer questions which may arise as to quality and acceptability of materials furnished and work performed and shall interpret the intent of the Contract Documents in a fair and unbiased manner. The Engineer will make visits to the site and determine if the work is proceeding in accordance with the Contract Documents.

26.2 The Contractor will be held strictly to the intent of the Contract Documents in regard to the quality of materials, workmanship and execution of the work. Inspections may be made at the factory or fabrication plant of the source of material supply.

26.3 The Engineer will not be responsible for the construction means, controls, techniques, sequences, procedures, or construction safety.

26.4 The Engineer shall promptly make decisions relative to interpretation of the Contract Documents.

27. LAND AND RIGHTS-OF-WAY

27.1 Unless stated otherwise in the Contract or Bid Documents, the Owner shall obtain all land and rights-of-way that are necessary for carrying out and for completing the work pursuant to the Contract Documents, unless otherwise mutually agreed.

27.2 The Owner shall provide to the Contractor information which delineates and describes the lands owned and rights-of-way acquired.

27.3 The Contractor shall provide without expense and without liability to the Owner any additional land and access thereto that the Contractor may desire for temporary construction facilities or for storage of materials.

28. MAINTENANCE GUARANTEE

28.1 The Contractor shall guarantee all materials and equipment furnished, and work performed, for a period of one year from the date of final completion. The Contractor warrants and guarantees for a period of one year that the completed system is free from all defects due to faulty materials or workmanship and the Contractor shall promptly make such corrections as may be necessary by reason of such defects including the repairs of any damage to other parts of the work resulting from such defects. The Owner will give notice of observed defects with reasonable promptness. In the event that the Contractor should fail to make such repairs, adjustments, or other work that may be made necessary by such defects, the Owner may do so and charge the Contractor the cost thereby incurred. The Contract Bond shall remain in full force and effect through the guarantee period.

29. TAXES

29.1 The Contractor will pay all sales, consumer, use, income and other similar taxes required by the law of the place where the work is performed.

30. NIGHT, HOLIDAY, OR SUNDAY WORK

30.1 No work shall be done on Sundays, national Holidays or before 7:30 a.m. or after 7:30 p.m. on any workday, except in case of emergencies, or when written permission or order is given because work items are of such a nature that they must be performed during these hours. The Director of Public Service shall authorize any work to be undertaken on Sundays, national Holidays or after 7:30 p.m.

31. CLEANING UP AFTER COMPLETION

31.1 When the work is completed, all areas disturbed by the contractor's operations shall be cleaned and restored as directed by the Engineer, to a neat and presentable condition.

32. SANITARY REGULATIONS

32.1 Suitable sanitary conveniences for the use of persons employed at the Project site, properly screened from the public observation, shall be provided and maintained by the Contractor.

33. NON-DISCRIMINATION IN EMPLOYMENT/AFFIRMATIVE ACTION

33.1 Contractor must attach an Equal Employment Opportunity policy to the bid and practice non-discriminatory hiring practices.

34. REFERENCE STANDARDS

34.1 Reference to the standards or specifications of any technical society, organization or association, shall mean the latest standard or specification adopted and published sixty (60) days prior to the date of taking bids, unless specifically stated otherwise.

35. ESTIMATE OF QUANTITIES

35.1 The quantities listed in the Bid Schedule form are to be considered as approximate and are to be used only for the comparison of bids and used as the basis for computing amounts of

security of penal sums of bonds to be furnished. The unit prices are to be tendered expressly for the scheduled quantities as they may be increased or decreased. Payments, except for lump sum contracts and except for lump sum items in unit price contracts, will be made to the Contractor for the actual quantities only of work performed or materials furnished in accordance with the plans and specifications, and it is understood that the scheduled quantities of work to be done and materials to be furnished may each be increased or decreased without in any way invalidating the unit bid prices.

36. **AS-BUILTS**

36.1 Unless otherwise specified in the Contract Documents, the Contractor shall submit two (2) sets of "As-Built" plans upon completion of the work. "As-Built" plans shall show any changes to the plans in carefully drawn and lettered details, plans, notes, sketches, and/or dimensions as required to provide a complete and accurate record of the work.

37. **RECORDS AND REPORTING REQUIREMENTS**

Contractor shall provide Owner with reports as required for compliance with the terms and conditions of this contract and with the award and use of federal transportation-aid funding.

38. **DRUGFREE WORKPLACE**

Contractor shall be enrolled in, and in good standing with, the Drug-Free Workplace Program (DFWP) or a similar program approved by the Ohio Bureau of Workers' Compensation, and require the same of any of its subcontractors.

39. **CLAIMS**

39.1 Claims by the Contractor must be initiated within ten (10) days after occurrence of the event giving rise to such Claim. Claims by the Contractor must be initiated by written notice to the Owner and the Engineer. Failure by the Contractor to present written claims within ten (10) days of the event giving rise to the claim shall constitute an express waiver of any rights to additional time, money or other relief.

39.2 Claims, disputes and other matters in question arising out of or relating to this Contract shall be referred initially to the Engineer for decision. Such matters shall, after initial decision by the Engineer or thirty (30) days after submission of the matter to the Engineer, be subject to mediation as a condition precedent to the institution of legal or equitable proceedings by either party. As used in this Contract, a "Claim" is a demand or assertion by one of the parties seeking as a matter of right, adjustment or interpretation of Contract terms, payment of money, extension of time or other relief with respect to the terms of this Contract.

39.3 Pending final resolution of a Claim, the Contractor shall proceed diligently with performance of the Contract and the Owner shall continue to make payment in accordance with the Contract.

40. **MEDIATION AND DISPUTES**

40.1 Any claim arising out of or related to the Project shall be subject to mediation as a condition precedent to the institution of legal or equitable proceedings by either party.

40.2 The parties shall endeavor to resolve their claims by mediation which, unless the parties mutually agree otherwise, shall be in accordance with the Construction Industry Mediation Rules of the American Arbitration Association currently in effect. Request for mediation shall be filed in writing with the other party to this Contract and the American Arbitration Association. The request may be made concurrently with the filing of legal or equitable proceedings but, in such event, mediation shall proceed in advance of legal or equitable proceedings, which shall be stayed pending mediation for a period of twenty-one (21) days from the date of filing, unless stayed for a longer period by agreement of the parties or court order.

40.3 The parties shall share the mediator's fee and any filing fees equally. The mediation shall be held in Hilliard, Ohio, unless another location is mutually agreed upon by the Contractor and Owner. Agreements reached in mediation shall be enforceable as settlement agreements in any court having jurisdiction thereof.

41. APPLICATION AND GOVERNING LAW

41.1 The Contract and the rights of the parties thereunder shall be governed by the laws of the State of Ohio and only Ohio courts shall have jurisdiction over any action or proceeding concerning the Contract and/or performance thereunder. The Contractor irrevocably consents to such jurisdiction.

42. CONTRACTOR'S STANDARD OF CARE

42.1 The Contractor shall perform the Work in a workmanlike manner, consistent with the standards of skill and care exercised by entities licensed to perform (where required under applicable law) and regularly performing comparable work in the same or similar locality under the same or similar circumstances.

CONTRACT, PROPOSAL AND STANDARD DOCUMENTS

1. CONTRACT
2. CERTIFICATE OF LAW DIRECTOR
3. CERTIFICATE OF CITY FINANCE DIRECTOR
4 INSURANCES
5. NOTICE OF AWARD
6A. “LIMITED” NOTICE TO PROCEED
6B. “FULL” NOTICE TO PROCEED
7. BID PROPOSAL
8. BID GUARANTY & CONTRACT BOND
8(a) NOTICE OF COMMENCEMENT
8(b) NOTICE TO UTILTIES
9(a). NON-COLLUSION AFFIDAVIT
9(b). UNRESOLVED FINDING FOR RECOVERY AFFIDAVIT
9(c). RESOURCES AND EXPERIENCE OF BIDDER
11. LIST OF SUBSTITUTIONS
12. LIST OF SUBCONTRACTORS
13. AFFIDAVIT OF CONTRACTOR PREVAILING WAGE (SAMPLE)
14. NON DELINQUENT TAX AFFIDAVIT
15. APPLICATION FOR PAYMENT
16. APPLICATION FOR SUBSTANTIAL COMPLETION

1. CONTRACT

This contract is made and entered into this _____ day of _____ 2015, by and between the City of Hilliard, Ohio (the "City") and _____ (the "Contractor")

WITNESSETH: That the parties to these presents, each in consideration of the undertakings, promises and agreements on the part of the other herein contained, have undertaken, promised and agreed and do hereby undertake, promise and agree as follows:

ARTICLE I. The Contractor, in consideration of the sums of money herein specified to be paid by the City to the Contractor, shall and will at its own cost and expense, furnish all labor, materials, tools, equipment, transportation and all other things that may be necessary to furnish and construct the **MUNICIPAL PARK NORTH MULTI-USE PATH (CIP T-133)** (the "Project") in accordance with the specifications and drawings with the Notice to Contractors, Information for Bidders, Special Specifications, Special Provisions (if any), General Conditions, Addenda, Appendices, Detailed Drawings and Bonds (collectively, "Bid Documents") attached hereto and made a part of this Contract. All work for the Project is to be fully completed to the satisfaction of the Engineer and to the acceptance of the City on or before the date for completion set forth in the Notice to Proceed and at the prices listed in the Bid Proposal and Bid Schedule, Appendix A of the Bid Documents.

***NOTE:** The date of this agreement will be the date of the signing of the contract by the City. The date will not be filled in by the Contractor when contractor signs the Contract.

Said _____ (Contractor) hereby further agrees to withhold City of Hilliard income taxes due or payable under the provisions of Ordinance No. 94-10 of the City of Hilliard, Ohio, for wages, salaries and commissions paid to its employees and further agrees that any of its subcontractors shall be required to agree to withhold any such City of Hilliard income taxes due under said Ordinance for services performed under this contract located in the City of Hilliard.

ARTICLE II. The City, in consideration of the full and faithful performance by Contractor, agrees that it will pay to said Contractor an amount not to exceed _____ Dollars ($_____) for the prices and sums written into the Bid Schedule, Appendix A of the Bid Documents. Payments are to be made pursuant to the procedure outlined in sections 19 and 20 of the General Standards.

ARTICLE III. All requirements of the Bid Documents are incorporated herein by reference.

(continues on following page)

IN TESTIMONY WHEREOF, the said parties, each by a duly authorized representative, have hereunto set their hands the day and year first above written.

CITY OF HILLIARD, OHIO

By: _____
Steve Mazer
Director of Recreation and Parks

CONTRACTOR:

_____

By: _____

Print _____

Title: _____

2. CERTIFICATE OF CITY LAW DIRECTOR

I hereby approve the form and correctness of the above agreement.

Date: _____, 2015.

_____
Tracy L. Bradford
Director of Law

3. CERTIFICATE OF CITY FINANCE DIRECTOR

It is hereby certified that the amount of $_____ required to meet the agreement, obligation, payment or expenditure, for the above, has been lawfully appropriated or authorized or directed for such purpose and is in the Treasury or in the process of collection to the credit of the proper fund and is free from any obligation or certificates now outstanding.

Date: _____, 2015.

_____
David Delande
Director of Finance

Authorizing Legislation: _____ Passed: _____ Effective: _____

Purchase Order No: _____

4. ATTACH ALL INSURANCES TO THIS SHEET

Required attachments include Certificate of Liability Insurance and Certificate of Workers' Compensation coverage.

5. NOTICE OF AWARD

TO: _____

_____

_____

PROJECT: MUNICIPAL PARK NORTH MULTI-USE PATH (CIP T-133)

The Owner has considered the bid submitted by you for the above-described Project in response to its Advertisement for Bids dated 5/21/15 and 5/28/15, and in the Information for Bidders.

You are hereby notified that your bid has been accepted.

You are required by the Information for Bidders to execute the Contract and to furnish the required Contract Bond, Certificate of Liability Insurance and Certificate of Workers' Compensation coverage within ten (10) calendar days from the date of this notice to you.

If you fail to execute the Contract within ten (10) calendar days from the date of this notice, the Owner will be entitled to consider all your rights arising out of the Owner's acceptance of your bid as abandoned. The Owner will be entitled to such other rights as may be allowed by law. You are required to return an acknowledged copy of this Notice of Award to the Owner.

Dated this _____, 2015
City of Hilliard, Owner

By_____
Steve Mazer
Director of Recreation and Parks

ACCEPTANCE OF NOTICE
Receipt of the above Notice of Award is hereby acknowledged:

Company/Contractor Name: _____

By_____
(Name) (Title)

Date: _____, 2015

6A. "LIMITED" NOTICE TO PROCEED

TO: _____

_____

_____

PROJECT: MUNICIPAL PARK NORTH MULTI-USE PATH (CIP T-133)

You are hereby notified to commence work in accordance with the Contract dated _____ on or before _____ and you are to complete the work within _____ consecutive calendar days thereafter. The date of completion of all work is therefore _____, 2015.

This "Limited" Notice to Proceed does not grant permission to Contractor to _____.

City of Hilliard, Owner

By_____
Steve Mazer
Director of Recreation and Parks

ACCEPTANCE OF NOTICE
Receipt of the above "Limited" Notice to Proceed is hereby acknowledged:

Company/Contractor Name: _____

By_____
(Name) (Title)

Date: _____, 20___

6B. "FULL" NOTICE TO PROCEED

To: _____

_____

_____

PROJECT: **MUNICIPAL PARK NORTH MULTI-USE PATH (CIP T-133)**

You are hereby notified to commence work in accordance with the Contract dated _____ on or before _____ and you are to complete the work within _____ consecutive calendar days thereafter. The date of completion of all work is therefore _____, 2015.

City of Hilliard, Owner

By_____
Steve Mazer
Director of Recreation and Parks

ACCEPTANCE OF NOTICE
Receipt of the above "Full" Notice to Proceed is hereby acknowledged:

Company/Contractor Name: _____

By_____
(Name) (Title)

Date: _____, 2015

7. BID PROPOSAL

To the Director of Recreation and Parks of the City of Hilliard, Franklin County, Ohio.

After a careful examination of the Notice to Contractors, Specifications, Plans and Details and all other Contract Documents for the construction of:

MUNICIPAL PARK NORTH MULTI-USE PATH (CIP T-133)

(said specifications, plans and details the same as are on file with the City) and after a careful examination of the site of the proposed work, together with such investigations as are necessary to determine the character and extent of the work, the undersigned does hereby propose and agree to furnish all labor, materials, tools, equipment, transportation and all other things that may be necessary to furnish and construct the said work in full and in strict accordance with the said specifications, plans and details at the following prices, to wit:

Total Dollars in Numbers: $_____ (Base Bid)

Total Dollars in Words: _____

In case a discrepancy exists between the above amount as written in numbers and in words, the amount as written in words shall govern.

Reference has been made to the attached Bid Schedule, Appendix A, and this Bid Proposal is made in conformance therewith.

If this proposal is accepted by the City and the undersigned shall fail, within a period of ten (10) days from the Notice of Award, to execute the attached Contract, then the City may, at its option, determine that the undersigned has abandoned its bid, and thereupon this Proposal shall be null and void.

The full names and residences of all persons, parties or corporation interested in the foregoing bid as principals are as follows:

NAME	ADDRESS
_____	_____
_____	_____
_____	_____

Name of Company _____

Signature of Bidder_____

Title _____

Business Address of Bidder _____

_____

_____

Dated at _____ this _____ day of _____

8. BID GUARANTY & CONTRACT BOND

(SECTION 153.571 Ohio Revised Code)
(Not to be filled out if a certified check, cashier's check or letter of credit is submitted)

KNOW ALL MEN BY THESE PRESENTS, that we, the undersigned

_____,
(Name and Address)

as Principal and _____,
(Name of Surety)

as Surety, are hereby held and firmly bound unto the City of Hilliard, Ohio, as the Owner and Obligee, , in the penal sum of the dollar amount of the bid submitted by the Principal to undertake the Project known as **MUNICIPAL PARK NORTH MULTI-USE PATH (CIP T-133).**

The penal sum referred to herein shall be the dollar amount of the Principal's bid to the Obligee, incorporating any additive or deductive alternate proposals made by the Principal on the date referred to above to the Obligee, which are accepted by the Obligee. In no case shall the penal sum exceed the amount of one hundred percent (100%) of the bid, including any alternates which may be accepted. For the payment of the penal sum well and truly be made, we hereby jointly and severally bind ourselves, our heirs, executors, administrators, successors, and assigns.

Signed this _____ day of _____, 20__, THE CONDITION OF THE ABOVE OBLIGATION IS SUCH that, whereas the above named Principal has submitted a bid for the above referred to Project.

NOW, THEREFORE, if the Obligee accepts the bid of the Principal, and the Principal fails to enter into a proper Contract in accordance with the bid, plans, details, specifications and bills of material; and in the event the Principal pays to the Obligee the difference not to exceed ten percent (10%) of the penalty hereof between the amount specified in the bid and such larger amount for which the Obligee may in good faith contract with the next lowest bidder to perform the work covered by the bid; or in the event the Obligee does not award the Contract to the next lowest bidder and resubmits the Project for bidding, the Principal pays to the Obligee the difference not to exceed ten percent (10%) of the penalty hereof between the amount specified in the bid, or the costs, in connection with the resubmission, of printing new contract documents, required advertising and printing and mailing notices to prospective bidders, whichever is less, then this obligation shall be null and void, otherwise to remain in full force and effect; if the Obligee accepts the bid of the Principal and the Principal, within ten (10) days after the awarding of the Contract, enters into a proper Contract in accordance with the bid, plans, details, specifications, and bills of material, which said Contract is made a part of this Bid Guaranty the same as though set forth herein;

NOW ALSO, if the said _____ shall well and faithfully do and perform the things agreed by _____ to be done and performed according to the terms of said Contract; and shall pay all lawful claims of subcontractors, materialmen and laborers, for labor performed and materials furnished in the carrying forward, performing, or

completing of said Contract; we agreeing and assenting that this undertaking shall be for the benefit of any materialman or laborer having a just claim, as well as for the Obligee herein; then this obligation shall be void; otherwise the same shall remain in full force and effect; it being understood and agreed that the liability of the Surety for any and all claims hereunder shall in no event exceed the penal amount of this obligation as herein stated.

The said Surety hereby stipulates and agrees that no modifications, omissions, or additions, in or to the terms of the said Contract or in or to the plans and specifications therefore shall in any wise affect the obligations of said Surety or its bond, and it does hereby waive notice of any such modifications, omissions or additions to the terms of the Contract or in or to the plans or specifications thereto.

FURTHER, it is expressly understood and agreed that this bond shall remain in full force and effect and continue as a guarantee of workmanship and materials for a period of one (1) year after completion of the Contract and final acceptance of the completed work by the Obligee.

IN WITNESS WHEREOF, the Principal and the Surety have hereunto set their hands and such of them as are officers of corporations have signed under proper authority from the corporation, the day and year first set forth above.

PRINCIPAL:

By_____

Its_____

SURETY:

By_____

Its_____

The foregoing is approved by:

CITY OF HILLIARD, OHIO

By_____
Steve Mazer, Director of Recreation and Parks

By_____
David Delande, Director of Finance

Approved as to form:

_____
Tracy L. Bradford, Director of Law

IMPORTANT: Surety companies executing Bonds must appear on the Treasury Department's most current list (Circular 570 as amended) and must not exceed the underwriting limitation. Surety companies and their agents or attorneys-in-fact must be authorized to transact business in the State of Ohio and shall furnish proof of such authorization in the Bid.

8(a) NOTICE OF COMMENCEMENT

NOTICE OF COMMENCEMENT FOR PUBLIC IMPROVEMENT

O.R.C. 1311.252

State of Ohio }
}ss:
County of Franklin }

Notice is hereby given by Steve Mazer, being first duly cautioned and sworn, the Director of Recreation and Parks of the City of Hilliard, of the commencement of a public improvement as follows:

(1) The project name, location, and a number used by the City of Hilliard to identify the public improvement is:

MUNICIPAL PARK NORTH MULTI-USE PATH (CIP T-133)

(2) The name and address of the public authority is:

City of Hilliard
3800 Municipal Way
Hilliard, Ohio 43026

(3) The name, address, and trade of the principal contractor on the public improvement is as follows:

_____
_____
_____
_____

(4) The date the public authority first executed a contract with a principal contractor for the public improvement was _____, 20____.

(5) The name and address of the surety for the principal contractor is:

_____
_____
_____
_____

(continues on following page)

(6) The name and address of the representative of the City of Hilliard upon whom service shall be made for the purposes of serving an affidavit pursuant to Section 1311.26 of the Ohio Revised Code is:

City of Hilliard
Director of Law
3800 Municipal Way
Hilliard, Ohio 43026
(614) 876-7361, ext. 781

Signed:

_____
Steve Mazer
Director of Recreation and Parks
City of Hilliard

Approved as to form:

_____
Tracy L. Bradford
Director of Law
City of Hilliard

State of Ohio }
}ss:
County of Franklin }

The foregoing instrument was acknowledged before me this _____ day of _____, 2015 by Steve Mazer, Director of Recreation and Parks for the City of Hilliard, Ohio.

_____
Notary Public

8(B) NOTICE TO UTILITIES

_____, 2015

_____ (Utility)
_____
_____

Re: Notification of Public Improvement Project

To Whom it May Concern:

This letter serves as the 10 day notice to utilities, as required per Ohio Revised Code (ORC 153.64). You are hereby notified of the following public improvement project:

MUNICIPAL PARK NORTH MULTI-USE PATH (CIP T-133)

This project was awarded to _____ (Contractor). Contact information for Contractor is as follows:

Contractor_____
Contact Name _____
Address/Street _____
City, State ZIP _____
Phone _____
Fax _____
Mobile _____
Email _____

Construction is expected to begin on _____, 2015. There is a pre-construction conference scheduled for the above-mentioned project on _____, 2015 at _____ m. at _____ (location). If any of your installations or facilities are affected by this improvement, a representative of your division or organization is invited to attend. Your cooperation in this matter is greatly appreciated.

Sincerely,

_____
City Project Manager
City of Hilliard

Cc: Steve Mazer, Director of Recreation and Parks, City of Hilliard
Contractor
File

9(a) NON-COLLUSION AFFIDAVIT

STATE OF OHIO

COUNTY OF FRANKLIN

_____, being first duly sworn, deposes and says that he/she is the

_____
(Sole Owner, Partner, President, Secretary, etc.)

of _____ (Bidder)

the party making the foregoing Proposal or Bid, that such Bid is not made in the interest of or on behalf of any undisclosed person, partnership, company, association, organization, or corporation; that such Bid is genuine and not collusive or sham; that said Bidder has not directly or indirectly induced or solicited any other bidder to put in a false or sham bid, and has not directly or indirectly colluded, conspired, connived, or agreed with any bidder or anyone else to put in a sham bid, or that anyone shall refrain from bidding; that said Bidder has not in any manner, directly or indirectly, sought by agreement, communication or conference with anyone to fix the Bid price of said Bidder or of any other bidder, or to fix any overhead, profit, or cost element of such Bid price, or of that of any other Bidder, or to secure any advantage against the Owner awarding the Contract or anyone interested in the proposed contract; that all statements contained in such Bid are true; and, further, that said Bidder has not, directly or indirectly, submitted its Bid price or any breakdown thereof, or the contents thereof, or divulged information or data relative thereto, or paid and will not pay any fee in connection therewith, to any corporation, partnership, company, association, organization, Bid depository or to any member or agent thereof, or to any other individual except to such person or persons as have a partnership or the financial interest with said Bidder in its general business.

Signed:

By_____

Its_____

Sworn to and subscribed before me this _____ day of_____, 2015.

_____
Notary Public

9(b). UNRESOLVED FINDING FOR RECOVERY AFFIDAVIT

One of the affidavits below must be completed and included in the bid documents.

One.

STATE OF _____
) ss
COUNTY OF _____

The undersigned, being first duly sworn, is the _____ (title and office) of _____ (company), and states that, upon inspection of all pertinent records, that the Auditor of the State of Ohio has not issued a finding for recovery against said company and which recovery is unresolved, pursuant to Section 9.24 of the Ohio Revised Code.

_____
Affiant

Sworn to and subscribed before me this ____ day of _____, 2015.

_____
Notary Public

Two.

STATE OF _____
) ss
COUNTY OF _____

The undersigned, being first duly sworn, is the _____ (title and office) of _____ (company), and states that the Auditor of the State of Ohio has issued a finding of recovery against the company, but, that under Section 9.24, said recovery is not unresolved pursuant to one or more of the following factors (initial those that apply):

_____ The money identified in the finding for recovery is paid in full to the state agency or political subdivision to whom the money was owed.

_____ The debtor has entered into a repayment plan that is approved by the attorney general and the state agency or political subdivision to whom the money identified in the finding for recovery is owed. Documentation of the repayment plan as approved by the AG's office is required to be attached.

_____ The attorney general has waived a repayment plan for good cause shown.

_____ The debtor and state agency or political subdivision to whom the money identified in the finding for recovery is owed have agreed to a payment plan established through an enforceable settlement agreement. Documentation of the settlement agreement must be attached.

_____ The state agency or political subdivision desiring to enter into the contract with a debtor certifies, and the attorney general concurs, that all of the following are true:

1. Essential services the state agency or political subdivision is seeking to obtain from the debtor cannot be provided by any other person besides the debtor;
2. Awarding a contract to the debtor for the essential services described in (1) above is in the best interest of the state;
3. Good faith efforts have been made to collect the money identified in the finding of recovery.

_____ The debtor has commenced an action to contest the finding for recovery and a final determination on the action has not yet been reached.

_____
Affiant

Sworn to and subscribed before me this ____ day of _____, 2015.

_____
Notary Public

10. RESOURCES & EXPERIENCE OF BIDDER

11. LIST OF SUBSTITUTIONS

In the space below, the Bidder **shall** list all proposed Substitutions and additional information as required for approval by the Owner.

12. LIST OF SUBCONTRACTORS

In the space below, the Bidder **shall** list all proposed Subcontractors and their addresses for approval by the Owner. The Bidder shall also describe that portion of the work they propose to subcontract to each Subcontractor listed. The prime contractor must perform no less than (thirty) 30 percent of the total original construction contract price.

Attach additional sheets as required.

NAME	ADDRESS	DESCRIPTION OF WORK TO BE PERFORMED

13. NON-DELINQUENT TAX AFFIDAVIT

State of)
) ss
County of)

The undersigned being first duly sworn does say that to the best of his/her knowledge_____ has not been charged at the time this bid was submitted with any delinquent property tax on the general tax list of personal property of any county within this state nor to the best of his/her knowledge has _____ been charged with delinquent personal or real property taxes on any such tax list except as indicated below (if none so state).

Further, Affiant sayth naught.

_____

Sworn to before me and subscribed in my presence this ____ day of _____, 2015

_____
Notary Public

_____
My Commission Expires

14. AFFIDAVIT OF CONTRACTOR OR SUB-CONTRACTOR

PREVAILING WAGES

I, _____,

(Name of person signing affidavit) (Title)

of the _____ do hereby certify that the wages paid to all employees for the full number of hours worked in connection with the Contract for the _____ **(Project)** during the following period from _____ to _____ is in accordance with the prevailing wage prescribed by the Contract Documents.

I further certify that no rebates or deductions for any wages due any person have been directly or indirectly made other than those provided by law.

_____
(Signature of Officer or Agent)

Sworn to and subscribed in my presence this _____ day of _____, 20 ____

_____
(Notary Public)

The above affidavit must be executed and sworn to by the officer or agent or the Contractor or Subcontractor who supervises the payment of employees, before the owner will release the surety and/or make a final payment due under the terms of the Contract.

15. City of Hilliard
Application for Payment

MUNICIPAL PARK NORTH MULTI-USE PATH (CIP T-133)

Contractor _____

Pay Request No. _____ Date_____

Partial ( ) Final ( )

Total Original Contract	$
Total Change Orders	$
TOTAL CONTRACT TO DATE	**$**
WORK Value Completed to Date (per attached schedule of values)	$
Retainage (8% of value until 4% total contract value)	$
Total Due to date	$
Less Previous Payments	$
TOTAL DUE THIS ESTIMATE	**$**
ODOT SHARE	**$**
CITY OF HILLIARD SHARE	**$**

Contractor's Certification

The undersigned contractor certifies that to the best of their knowledge, information, and belief the WORK covered by this APPLICATION FOR PAYMENT has been completed in accordance with the CONTRACT DOCUMENTS.

BY_____

TITLE_____

DATE_____

Sworn and subscribed before me this _____ day of _____.

Notary Public_____

My Commission Expires _____

City of Hilliard Approvals

_____ _____
Construction Administrator Date

_____ _____
City Project Manager Date

_____ _____
Finance Department Date

Purchase Order No: _____

16. City of Hilliard Application for Substantial Completion

MUNICIPAL PARK NORTH MULTI-USE PATH (CIP T-133)

Contractor: _____

Date: _____

Substantial Completion has been achieved for: ____ Entire Project ____ The following:

_____.

Approved By City of Hilliard Engineer ___ YES ____ NO Date: _____

The Date of Substantial Completion of the WORK covered by this certificate is _____.

"Substantial Completion" refers to designated work being sufficiently complete, in accordance with the contract documents, such that the owner may occupy and utilize the work for its intended purpose without disruption of significant interference by the Contractor in completing or correcting any remaining portions of the work.

Any items in the work not completed by the date of this document shall be officially accepted as complete at the time of final payment. A one-year warranty on those items shall be in effect from the date of final payment.

Owner will provide the contractor with a Punch List of items to be completed or corrected prior to the Owner's issuing of the final payment. The Punch List does not alter the Contractor's responsibility to complete or correct all work in full compliance with the contract documents.

APPENDIX A
BID SCHEDULE

MUNICIPAL PARK NORTH MULTI-USE PATH P-856 BID FORM

REF #	ITEM	DESCRIPTION	QUANTITY	UNIT	UNIT PRICE	COST
		ROADWAY				
1	201	CLEARING AND GRUBBING	1	LUMP		
2	202	PIPE REMOVED	4	FT		
3	202	WALK REMOVED	558	SF		
4	202	CURB REMOVED	214	FT		
5	202	CURB AND GUTTER REMOVED	92	FT		
6	202	FENCE REMOVED	40	FT		
7	202	GUARDRAIL REMOVED	73	FT		
8	202	WOOD POLE REMOVED	1	EACH		
9	202	BOLLARDS REMOVED	3	EACH		
10	203	EXCAVATION	1195	CY		
11	203	MISC.:EXCAVATION, AS PER PLAN	46	CY		
12	203	EMBANKMENT	727	CY		
13	204	SUBGRADE COMPACTION	5243	SY		
14	204	PROOF ROLLING	3	HRS		
15	204	EXCAVATION OF SUBGRADE	270	CY		
16	204	EMBANKMENT USING #2 STONE, 703.01 (8")	180	CY		
17	204	EMBANKMENT USING ITEM 304 (4")	90	CY		
18	204	GEOTEXTILE FABRIC, 712.09, TYPE D	810	SY		
19	608	4" CONCRETE WALK, AS PER PLAN	2504	SF		
20	608	CURB RAMPS, AS PER PLAN (5')	4	EACH		
21	608	CURB RAMPS, AS PER PLAN (6')	1	EACH		
22	608	CURB RAMPS, AS PER PLAN (8')	3	EACH		
23	608	CURB RAMPS, AS PER PLAN (10')	6	EACH		
24	608	DETECTABLE WARNING, TYPE E, AS PER PLAN	3	EACH		
25	653	TOPSOIL, FURNISHED AND PLACED	676	CY		
26	SPECIAL	2" - #10 LIMESTONE SCREENINGS, AS PER PLAN	61	CY		
27	SPECIAL	SOIL STERILANT	1500	SY		
					ROADWAY SUBTOTAL:	
		EROSION CONTROL				
28	659	SEEDING AND MULCHING, AS PER PLAN	7210	SY		
29	659	COMMERCIAL FERTILIZER	0.2	TON		

30	659	WATER	39	MGAL		
31	659	EROSION CONTROL	21000	EACH	$1.00	$21,000.00
32	832	STORM WATER POLLUTION PREVENTION PLAN	1	LUMP		
					EROSION CONTROL SUBTOTAL:	
REF #	**ITEM**	**DESCRIPTION**	**QUANTITY**	**UNIT**	**UNIT PRICE**	**COST**
		DRAINAGE				
33	602	CONCRETE MASONRY	0.6	CY		
34	611	8" ADS N12 PIPE	137	FT		
35	611	10" ADS N12 PIPE	240	FT		
36	611	12" ADS N12 PIPE	102	FT		
37	611	12" CONDUIT, TYPE B, 706.02	48	FT		
38	611	12" CONDUIT, TYPE D, 706.02	36	FT		
39	611	27" CONDUIT, TYPE C, 706.02 OR ADS 12 PIPE	12	FT		
40	611	30" CONDUIT, TYPE A, 706.02 OR ADS 12 PIPE	42	FT		
41	611	18" NYLOPLAST DRAIN BASIN	8	EACH		
42	611	CATCH BASIN, NO. 2-2B, AS PER PLAN	1	EACH		
43	611	CATCH BASIN, NO. 2-3	1	EACH		
44	611	MANHOLES, NO. 3	1	EACH		
45	611	MANHOLE ADJUSTED TO GRADE	1	EACH		
					DRAINAGE SUBTOTAL:	
		PAVEMENT				
46	304	AGGREGATE BASE	908	CY		
47	407	TACK COAT	50	GAL		
48	423	CRACK SEALING, TYPE II	2300	LBS		
49	448	ASPHALT CONCRETE SURFACE COURSE, TYPE 1, PG64-22, MEDIUM TRAFFIC	520	TON		
50	448	ASPHALT CONCRETE INTERMEDIATE COURSE, TYPE 2, PG64-22, MEDIUM TRAFFIC	573	TON		
51	609	CURB, TYPE 6	196	FT		
52	609	CURB, TYPE 2A, AS PER PLAN	126	FT		
53	609	COMBINATION CURB & GUTTER	92	FT		
					PAVEMENT SUBTOTAL:	
		TRAFFIC CONTROL				
54	630	SIGNING, MISC.: Solar Powered Rectangular Rapid Flashing Beacon (RRFB) Sign Assembly, 1-Sided	2	EACH		

MUNICIPAL PARK NORTH MULTI-USE PATH P-856 BID FORM

55	630	SIGNING, MISC.: Solar Powered Rectangular Rapid Flashing Beacon (RRFB) Sign Assembly, 2-Sided	1	EACH		
56	630	2-1/4" SQUARE ANCHOR POST, AS PER PLAN	8	EACH		
57	630	GROUND MOUNTED SUPPORT POST, NO. 3 POST, TYPE S, AS PER PLAN	73.4	FT		
58	630	SIGN, FLAT SHEET, AS PER PLAN (SEE HILLIARD STD. DWG. TC-1)	37	SF		
59	644	CROSSWALK LINE, AS PER PLAN	76	FT		
60	644	PAVEMENT MARKING MISC.: WHITE YIELD LINE, AS PER PLAN	20	FT		
				TRAFFIC CONTROL SUBTOTAL:		
	ITEM	**DESCRIPTION**	**QUANTITY**	**UNIT**	**UNIT PRICE**	**COST**
		LANDSCAPING				
61	610	CELLULAR RETAINING WALL, AS PER PLAN	180	SF		
62	653	PLANTING MIXTURE, AS PER PLAN	17	CY		
63	661	HARDWOOD MULCH (3" MIN DEPTH)	5	CY		
64	661	LIRIOPE SPICATA, 1 GAL., CREEPING LILY TURF	85	EACH		
65	661	JUNIPERUS COMMUNIS "EFFUSA', 2 GAL., EFFUSA JUNIPER (18" MATURE HEIGHT)	20	EACH		
66	661	GAL., COMP. AMERICAN CRANBERRYBUSH	14	EACH		
					LANDSCAPING SUBTOTAL:	
		MAINTENANCE OF TRAFFIC				
67	614	LAW ENFORCEMENT OFFICER, WITH PATROL CAR, AS PER PLAN	40	HRS		
68	616	WATER	3	M GAL		
				MAINTENANCE OF TRAFFIC SUBTOTAL:		
		MISCELLANEOUS				
69	614	MAINTAINING TRAFFIC	1	LUMP		
70	623	CONSTRUCTION LAYOUT STAKES AND SURVEYING	1	LUMP		
71	624	MOBILIZATION	1	LUMP		
					MISCELLANEOUS SUBTOTAL:	
					BID TOTAL:	

APPENDIX B
SPECIAL SPECIFICATIONS

In addition to the maintenance of traffic provisions in the plans the Contractor shall conduct work activities to meet the following requirements:

1. All work on Scioto Darby Road shall be complete prior to August 15, 2015.
2. The work limits shall be clean and sufficiently protected from the public during the Hilliard Fall Festival, which is scheduled for Saturday, September 19, 2015 and Sunday, September 20, 2015. Storage of any equipment and materials on park property shall be coordinated with the Director of Recreation and Parks no later than 4 pm on Thursday, September 17, 2015.

APPENDIX C

DETAILED SPECIFICATIONS & STANDARD DRAWINGS

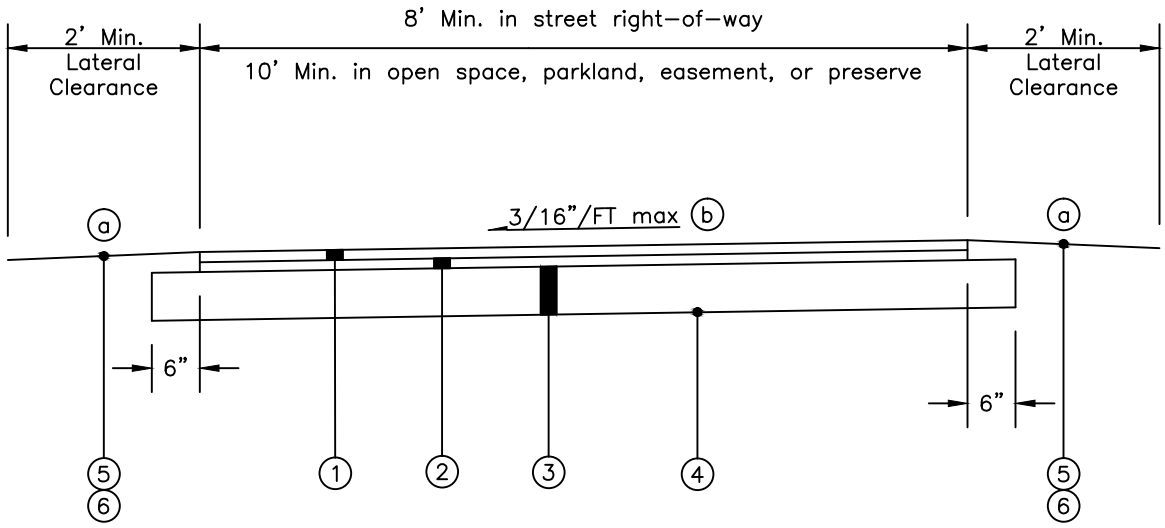

(1) Item 448 – 1 1/2" Asphalt Concrete, Surface Course, Type I, PG64-22, Medium Traffic

(2) Item 448 – 2 1/2" Asphalt Concrete*, Intermediate Course, Type 2, PG64-22, Medium Traffic

(3) Item 304 – 6" Aggregate Base

(4) Item 204 – Subgrade Compaction

(5) Item 659 – Seeding & Mulching, As Per Plan

(6) Item 653 – 3" Min pulverized topsoil, furnished & placed, As Per Plan or approved equal

(a) – Side slopes per typical section of plan
– All seeding/mulching and topsoil shall be free of weeds to ensure quality growth of grass

(b) For multi-use paths, 12' in width or greater, consideration should be given to provide a center crown

* Note: Asphalt concrete intermediate course may be reduced to 1½" min. in locations where utility, maintenance, or construction vehicle use of the path is expected to be minimal. City Engineer approval is required for this reduction.

	MULTI-USE PATH DETAILS	CITY OF HILLIARD, OHIO
DATE: March 31, 2015		STANDARD CONSTRUCTION DRAWING
SCALE: 1" = 2'		1/1 BP-1

S:\Public Service - Engineering\Hilliard Standards\Drawings\ACAD\Bike Path Details.dwg, 3/31/2015 10:10:44 AM

GENERAL NOTES, CURB RAMPS

1. CURB RAMP COMPONENTS: THE CURB RAMP INCLUDES THE RAMP PANEL, FLARED SIDES, AND LANDING WHEN NEEDED.

2. MATERIAL: THE RAMP PANEL AND FLARED SIDES SHALL BE CONCRETE. THE USE OF BRICK OR PAVERS IS NOT PERMITTED.

3. CURB RAMP TYPE: CURB RAMPS SHALL BE SPECIFIED BY THE APPROPRIATE TYPE AND SHALL BE PERPENDICULAR TO THE CENTERLINE OF THE CROSSING STREET
   - TYPE A – RAMP WITH LONG FLARES
   - TYPE C – RAMP IN UTILITY STRIP
   - TYPE D – RAMP OBSTRUCTED ON ONE SIDE
   - TYPE G – RAMP WITH RECESSED LOWER LANDING.
   - TYPE H – RAMP WITH RECESSED LOWER LANDINGIN A UTILITY STRIP
   - TYPE L – MEDIAN RAMP WITH CENTER LANDING
   - TYPE P1 – COMBINED PERPENDICULAR AND PARALLEL RAMP
   - TYPE P2 – COMBINED PERPENDICULAR AND PARALLEL RAMP IN ONE DIRECTION

NOTE: CITY OF HILLIARD ORDER OF PREFERENCE IS (1) KEEP RAMPS IN LINE WITH APPROACH WALKS AND (2) KEEP RAMPS IN FRONT OF SIDE STREET STOP SIGNS. RAMPS THAT DIRECT PEDESTRIANS INTO THE MIDDLE OF AN INTERSECTION AT AN ANGLE ARE NOT PERMITTED. WHEN RAMPS ARE NOT PERPENDICULAR TO THE CURB, A LANDING RECESSED SHALL BE PROVIDED AT THE BOTTOM OF THE RAMP & THE GRADE BREAK SHALL BE PERPENDICULAR TO THE DIRECTION OF TRAVEL. EXAMPLES OF RECOMMENDED CURB RAMP ALIGNMENTS ARE SHOWN BELOW:

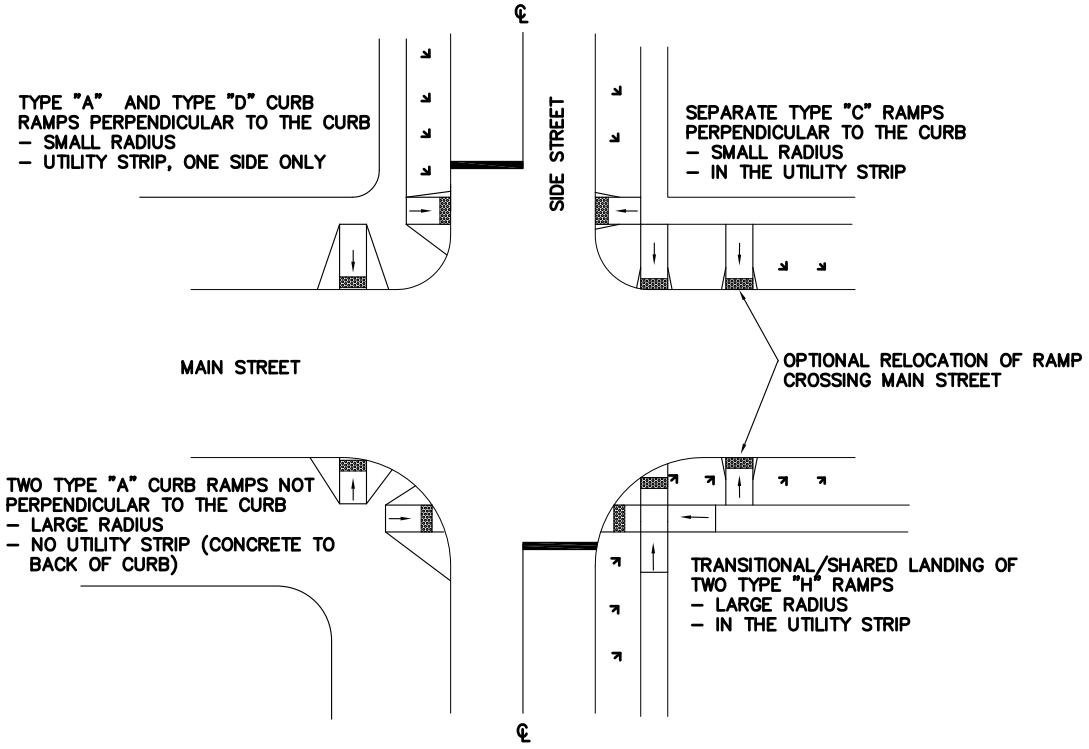

	CURB RAMP GENERAL NOTES	CITY OF HILLIARD, OHIO
DATE: March 6, 2015		STANDARD CONSTRUCTION DRAWING
SCALE: NTS		1/12 CR–1

4. CURB RAMPS AT ALLEY AND ARTERIAL CROSSINGS SHALL BE 8" THICK CONCRETE

5. RAMP RUNNING SLOPE: THE RUNNING SLOPE SHALL BE 5% TO 7.7%. THE RUNNING SLOPE MAY BE INCREASED TO 10 % WITH PRIOR WRITTEN CITY APPROVAL.

6. RAMP CROSS SLOPE: THE MAXIMUM CROSS SLOPE SHALL BE 1.56%.

7. FOR NEW CONSTRUCTION, MINIMUM RAMP WIDTH AND LANDING SIZE SHALL BE:
   - SIDEWALKS: 5' RAMP AND 5'X5' LANDING
   - MULTI-USE PATHS: 8' RAMP AND 5'X8' LANDING
   - LANDING AT INTERSECTING SIDEWALKS – WHEREVER SIDEWALKS INTERSECT, THERE SHALL BE A LANDING MEETING THE ABOVE REQUIREMENTS.

10. IN RETROFIT SITUATIONS, THE RAMP WIDTH MAY MATCH THE EXISTING APPROACH SIDEWALK OR MULTI-USE PATH OR 4' MINIMUM, WHICHEVER IS GREATER. THE MINIMUM LANDING SIZE SHALL BE 4' BY THE WIDTH OF THE EXISTING APPROACH WALK OR MULTI-USE PATH.

11. ALL JOINTS BETWEEN NEW AND EXISTING MATERIALS SHALL BE FLUSH.

12. LONG FLARES: THE LENGTH MEASUREMENT OF THE FLARE AT THE FACE OF CURB SHALL BE A MINIMUM OF 10 TIMES THE CURB HEIGHT

13. 1-FT FLARES: THE MEASUREMENT OF THE FLARE AT THE FACE OF CURB SHALL BE A MINIMUM OF 1-FT.

14. STREET COUNTER SLOPE: THE COUNTER SLOPE AT THE BASE OF THE RAMP SHALL BE A MAXIMUM OF 5% FOR A MINIMUM OF 2-FT.

15. RAMPS AT MARKED AND UNMARKED CROSSINGS: AT MARKED CROSSINGS THE RAMP AND STREET LANDING MUST BE FULLY CONTAINED WITHIN THE MARKED CROSSWALK. AT UNMARKED CROSSINGS THE RAMP AND STREET LANDING MUST BE WITHIN THE PEDESTRIAN RIGHT-OF-WAY AS DEFINED BY CITY CODE.

16. SURFACES: RAMP, FLARE, AND LANDING SURFACES MUST BE STABLE AND SLIP RESISTENT. RAMPS SHALL BE MEDIUM BROOMED TRANSVERSE TO THE DIRECTION OF TRAVEL. GRATINGS, VALVE BOXES, AND UTILITY BOXES SHALL NOT BE LOCATED IN THE RAMP, LANDING, OR TRANSITION AREAS.

17. OFFSET INTERSECTIONS: AT OFFSET 'T' INTERSECTIONS RAMPS BETWEEN OFFSET STREETS MAY BE DELETED IF THE CENTERLINES OF OFFSET STREETS ARE NO MORE THAN 200-FT APART.

18. OPPOSING RAMPS SHALL HAVE A PEDESTRIAN WALKWAY ACROSS THE STREET, ATLEAST 7' WIDE, WITH A CROSS SLOPE (LONGITUDINAL STREET SLOPE) OF NO GREATER THAN 1.56%. VERTICAL CURVES SHALL BE INSTALLED AS NEEDED.

19. FOR SIDEWALK OR MULTI-USE PATH CROSSINGS OF PRIVATE DRIVEWAYS:
   - PEDESTRIANS HAVE THE RIGHT OF WAY FOR CROSSINGS OF UNSIGNALIZED PRIVATE DRIVEWAYS (RESIDENTIAL AND COMMERCIAL): THEREFORE, THE SIDEWALK OR PATH SHOULD EXTEND THROUGH THE DRIVEWAY AT GRADE WITH NO CURB RAMP OR DETECTABLE WARNING.
   - IN LOCATIONS WHERE TREE LAWN WIDTHS ARE NARROW MAKING THE DRIVEWAY APPROACH TOO STEEP TO PROVIDE A SAFE TRANSITION FOR VEHICLES BETWEEN THE STREET AND DRIVEWAY, THE SIDEWALK OR PATH MAY DROP IN ELEVATION 10'-15' ON EITHER SIDE OF THE DRIVEWAY. NO CURB RAMP OR DETECTABLE WARNING IS REQUIRED IN THIS CASE. THE MAX CROSS SLOPE SHALL BE 1.56%.
   - AT LARGE COMMERCIAL UNSIGNALIZED DRIVEWAYS, PROVISIONS FOR SIDEWALKS AND PATHS AND THE NEED FOR RAMPS AND DETECTABLE WARNINGS SHALL BE EVALUATED ON A CASE-BY-CASE BASIS.
   - LARGE COMMERCIAL SIGNALIZED DRIVEWAYS SHALL BE TREATED AS PUBLIC STREET INTERSECTIONS WITH RESPECT TO LOCATION AND DESIGN OF ALL SIDEWALKS, MULTI-USE PATHS, CURB RAMPS, AND DETECTABLE WARNINGS.

	CURB RAMP GENERAL NOTES	CITY OF HILLIARD, OHIO	
DATE: March 6, 2015		STANDARD CONSTRUCTION DRAWING	
SCALE: NTS		2/12	CR-1

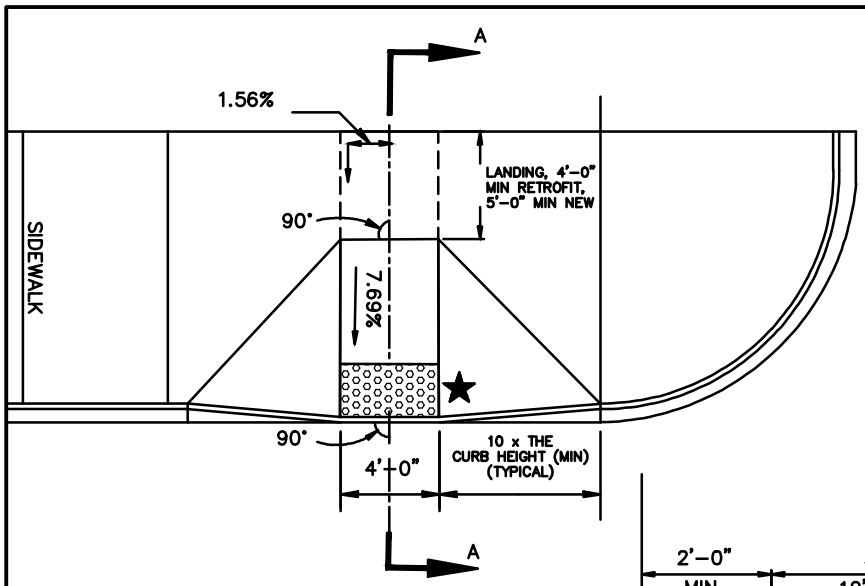

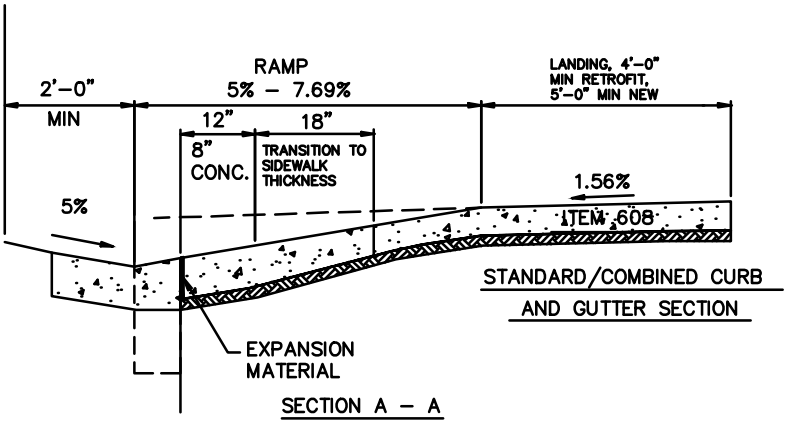

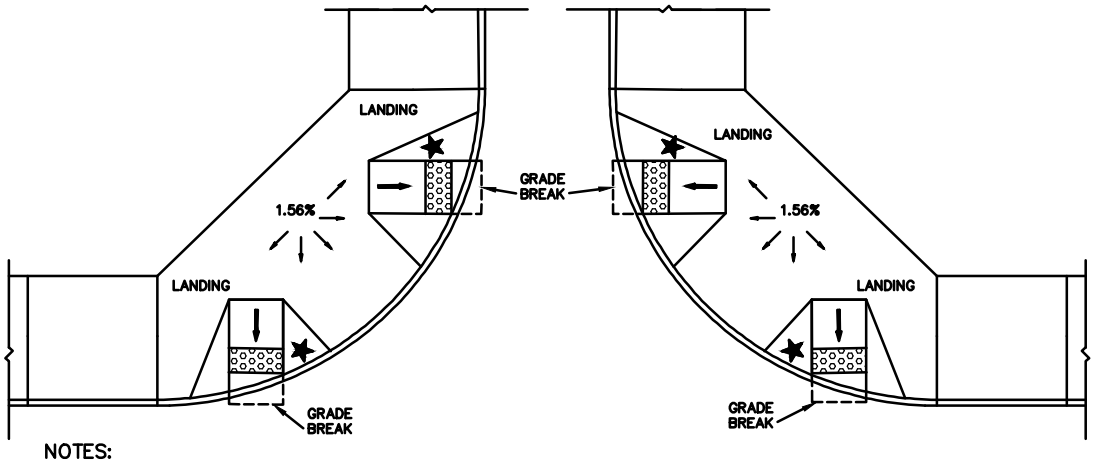

NOTES:

1. RAMP SHALL NOT ORIENT PEDESTRIANS INTO THE CENTER OF AN INTERSECTION. WHEN PLACED WITHIN THE RADIUS, A TYPE A RAMP SHALL BE ORIENTED DIRECTLY ACROSS FROM THE OPPOSING RAMP, PERPENDICULAR TO THE CENTERLINE OF THE CROSSING STREET.
2. THE 5% MAXIMUM COUNTERSLOPE WHERE THE BOTTOM OF THE RAMP MEETS THE STREET APPLIES TO BOTH STRAIGHT CURB AND CURB AND GUTTER SECTIONS
3. WHEN RAMPS ARE NOT PERPENDICULAR TO THE CURB, A RECESSED LANDING SHALL BE PROVIDED AT THE BOTTOM OF THE RAMP AND THE GRADE BREAK SHALL BE PERPENDICULAR TO THE DIRECTION OF TRAVEL

★ SEE SHEET 12/12 FOR DETECTABLE WARNING DETAILS

	CURB RAMP TYPE A	CITY OF HILLIARD, OHIO
DATE: March 6, 2015	RAMP WITH LONG FLARES	STANDARD CONSTRUCTION DRAWING
SCALE: NTS		3/12 CR–1

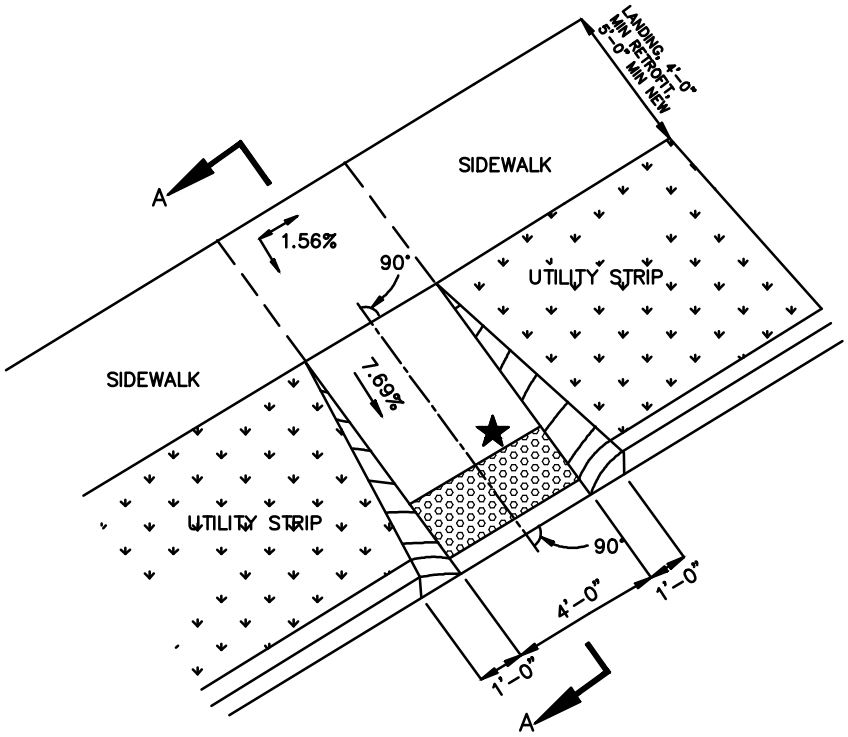

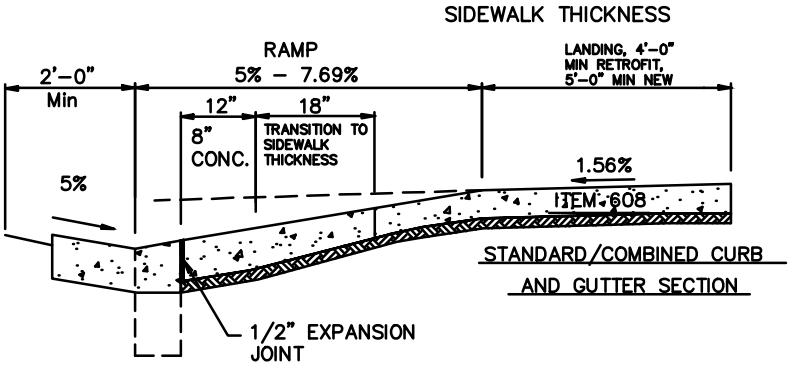

SECTION A – A

NOTES:
1. RAMP SHALL NOT NOT BE PLACED IN FRONT OF A STOP SIGN OR IN FRONT OF THE NORMAL STOPPING LOCATION OF VEHICLES AT A STOP OR SIGNAL CONTROLLED INTERSECTION. A TYPE H RAMP SHOULD BE USED INSTEAD.
2. THE 5% MAXIMUM COUNTERSLOPE WHERE THE BOTTOM OF THE RAMP MEETS THE STREET APPLIES TO BOTH STRAIGHT CURB AND CURB AND GUTTER SECTIONS

★ SEE SHEET 12/12 FOR DETECTABLE WARNING DETAILS

	CURB RAMP TYPE C	CITY OF HILLIARD, OHIO
DATE: March 6, 2015	RAMP IN UTILITY STRIP	STANDARD CONSTRUCTION DRAWING
SCALE: NTS		4/12 CR–1

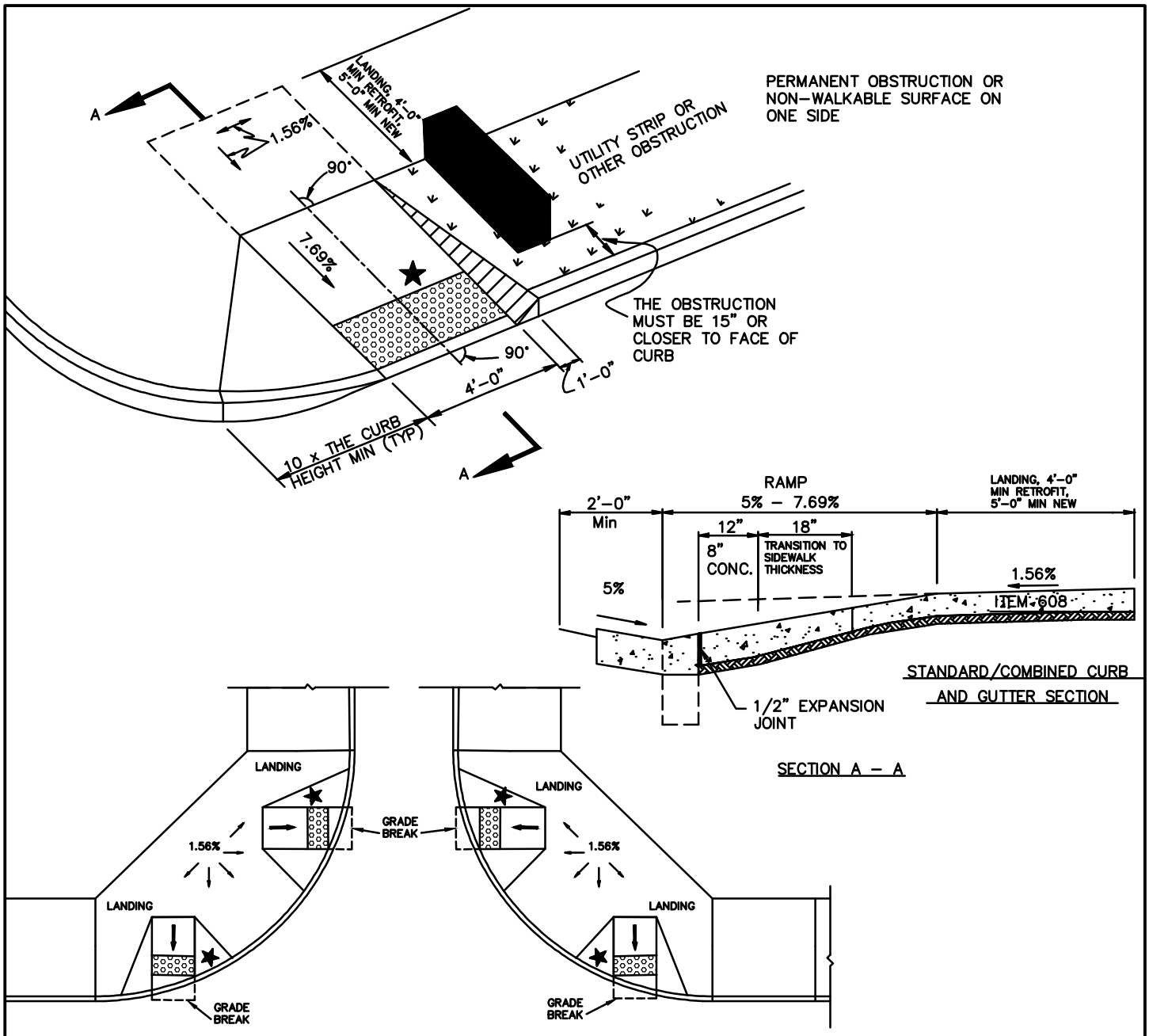

NOTES:

1. RAMP SHALL NOT ORIENT PEDESTRIANS INTO THE CENTER OF AN INTERSECTION. WHEN PLACED WITHIN THE RADIUS, A TYPE "D" RAMP SHALL BE ORIENTED DIRECTLY ACROSS FROM THE OPPOSING RAMP, PERPENDICULAR TO THE CENTERLINE OF THE CROSSING STREET.
2. THE 5% MAXIMUM COUNTERSLOPE WHERE THE BOTTOM OF THE RAMP MEETS THE STREET APPLIES TO BOTH STRAIGHT CURB AND CURB AND GUTTER SECTIONS
3. WHEN RAMPS ARE NOT PERPENDICULAR TO THE CURB, A RECESSED LANDING SHALL BE PROVIDED AT THE BOTTOM OF THE RAMP AND THE GRADE BREAK SHALL BE PERPENDICULAR TO THE DIRECTION OF TRAVEL

★ SEE SHEET 12/12 FOR DETECTABLE WARNING DETAILS

	CURB RAMP TYPE D	CITY OF HILLIARD, OHIO
DATE: March 6, 2015	RAMP OBSTRUCTED ON ONE SIDE	STANDARD CONSTRUCTION DRAWING
SCALE: NTS		5/12 CR-1

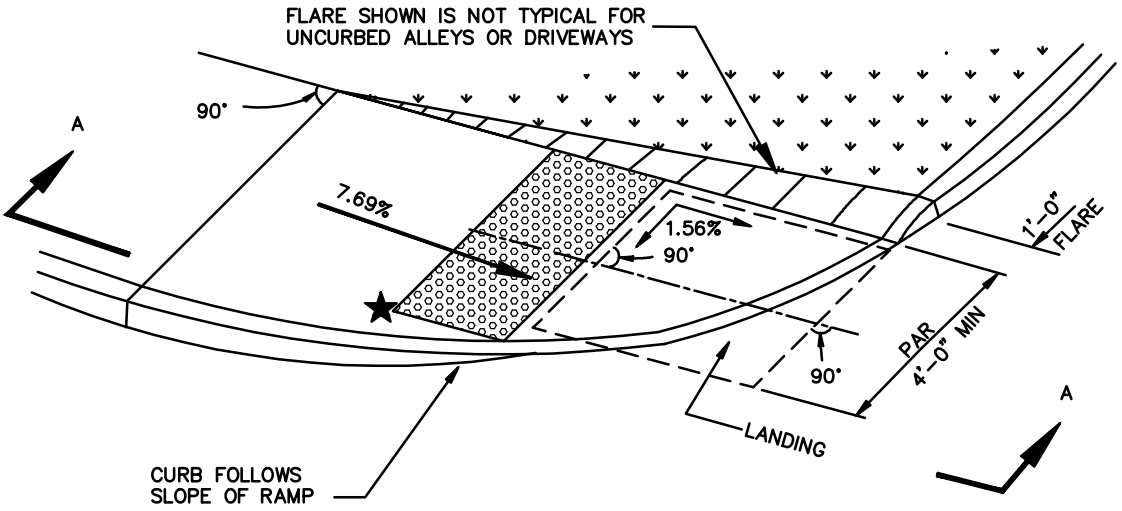

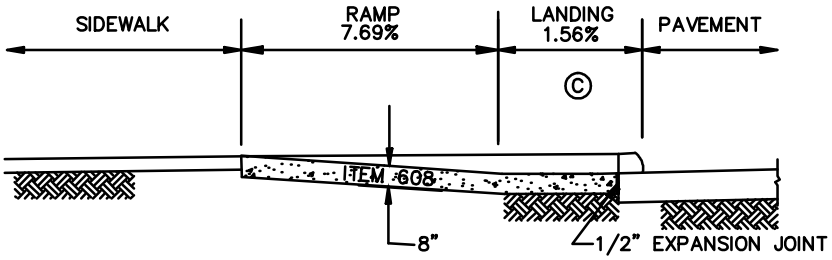

SECTION A–A

SUPPLEMENTAL NOTES

A. THE BOTTOM EDGE OF THE RAMP SHALL CHANGE PLANES PERPENDICULAR TO THE LANDING.
B. THE EDGE OF THE CURB SHALL BE FLUSH WITH THE EDGE OF THE ADJACENT PAVEMENT AND GUTTER.
C. THE LANDING AT THE BOTTOM OF THE RAMP SHALL BE >= 2.5–FT BY 4–FT WITH A MAXIMUM CROSS SLOPE OF 1.56% IN TWO DIRECTIONS.
D. THE PEDESTRIAN ACCESS ROUTE (PAR) BETWEEN THE TWO RAMPS SHALL HAVE A MAXIMUM OF 1.56% CROSS SLOPE WITH A 5% MAXIMUM RUNNING SLOPE
E. THE 5% MAXIMUM COUNTERSLOPE WHERE THE BOTTOM OF THE RAMP MEETS THE STREET APPLIES TO BOTH STRAIGHT CURB AND CURB AND GUTTER SECTIONS

★ SEE SHEET 12/12 FOR DETECTABLE WARNING DETAILS

	CURB RAMP TYPE G	CITY OF HILLIARD, OHIO
DATE: March 6, 2015	RAMP WITH RECESSED LOWER LANDING	STANDARD CONSTRUCTION DRAWING
SCALE: NTS		6/12 CR–1

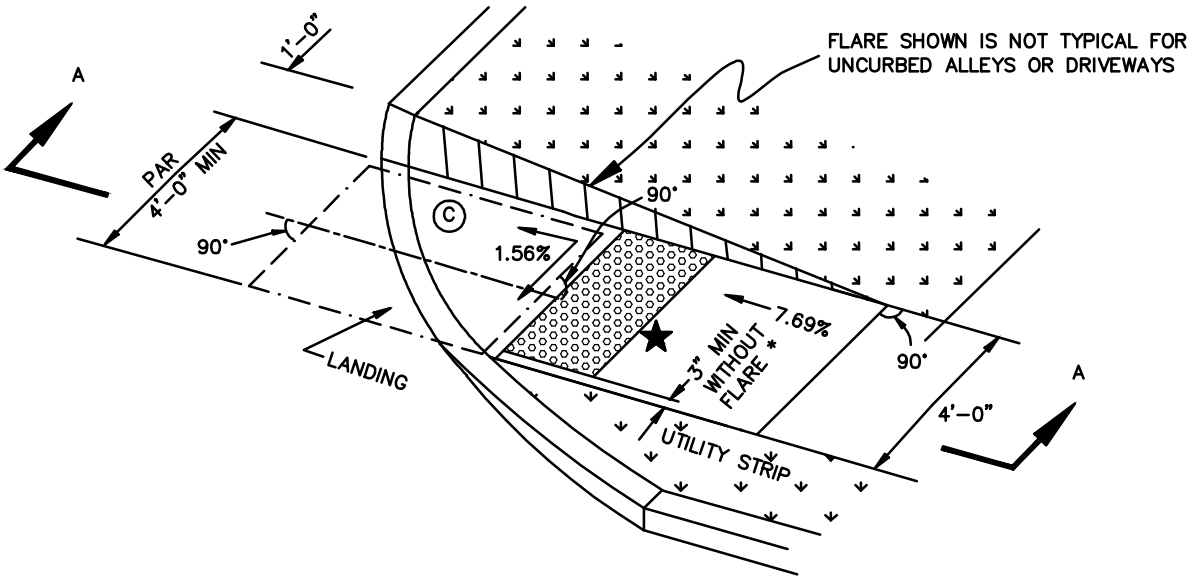

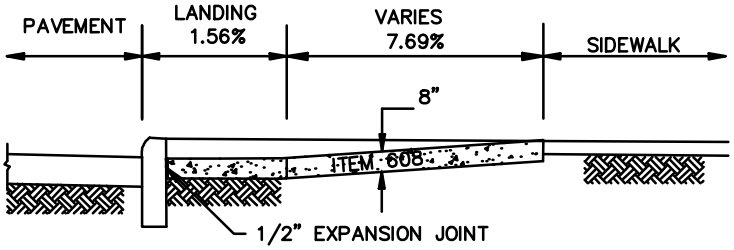

SECTION A–A

SUPPLEMENTAL NOTES

A. THE BOTTOM EDGE OF THE RAMP SHALL CHANGE PLANES PERPENDICULAR TO THE LANDING.
B. THE EDGE OF THE CURB SHALL BE FLUSH WITH THE EDGE OF THE ADJACENT PAVEMENT AND GUTTER.
C. THE LANDING AT THE BOTTOM OF THE RAMP SHALL BE >= 2.5–FT BY 4–FT WITH A MAXIMUM CROSS SLOPE OF 1.56% IN TWO DIRECTIONS.
D. THE PEDESTRIAN ACCESS ROUTE (PAR) BETWEEN THE TWO RAMPS SHALL HAVE A MAXIMUM OF 1.56% CROSS SLOPE WITH A 5% MAXIMUM RUNNING SLOPE
E. THE 5% MAXIMUM COUNTERSLOPE WHERE THE BOTTOM OF THE RAMP MEETS THE STREET APPLIES TO BOTH STRAIGHT CURB AND CURB AND GUTTER SECTIONS

* THIS IS FOR EMBEDDED (NON–SURFACE APPLIED) DETECTABLE WARNINGS ONLY

★ SEE SHEET 12/12 FOR DETECTABLE WARNING DETAILS

	CURB RAMP TYPE H	CITY OF HILLIARD, OHIO
DATE: March 6, 2015	RAMP WITH RECESSED LOWER LANDING IN UTILITY STRIP	STANDARD CONSTRUCTION DRAWING
SCALE: NTS		7/12 CR–1

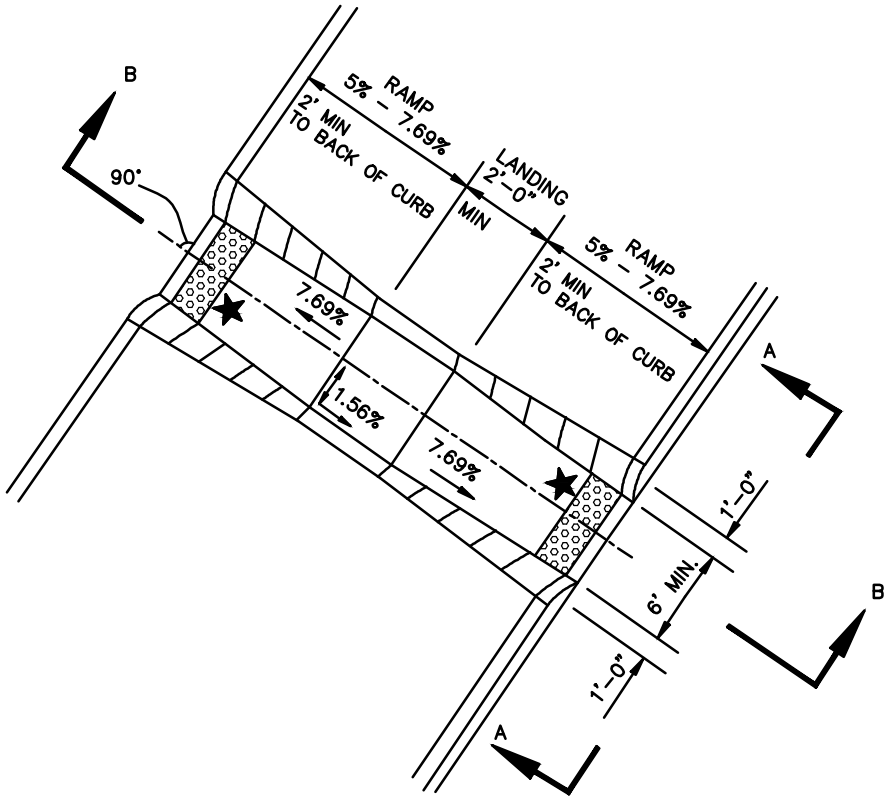

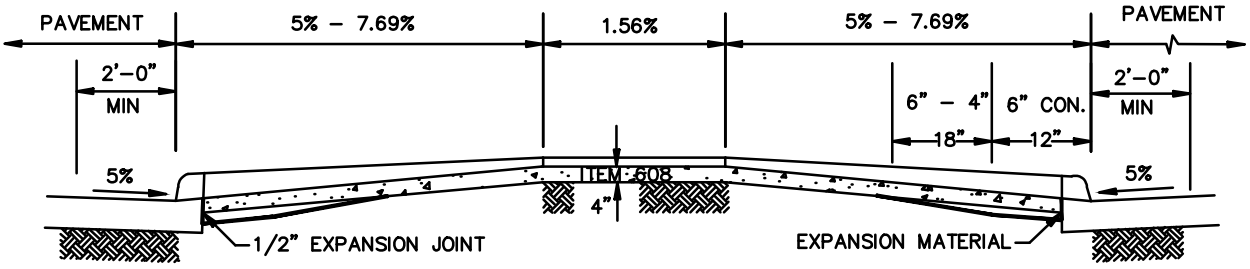

SECTION B–B

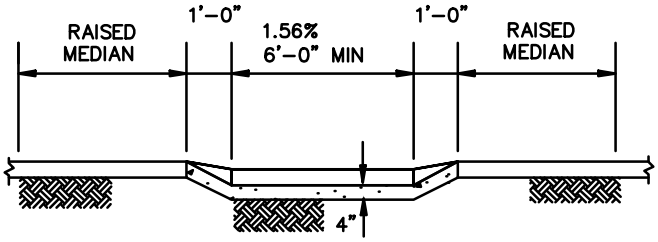

SECTION A–A

RAMPS MAY BE OMITTED IN MEDIANS IF PEDESTRIANS CAN CROSS THROUGH THE MEDIAN AT STREET GRADE

★ SEE SHEET 12/12 FOR DETECTABLE WARNING DETAILS

	CURB RAMP TYPE L	CITY OF HILLIARD, OHIO
DATE: March 6, 2015	MEDIAN RAMP WITH CENTER LANDING	STANDARD CONSTRUCTION DRAWING
SCALE: NTS		8/12 CR–1

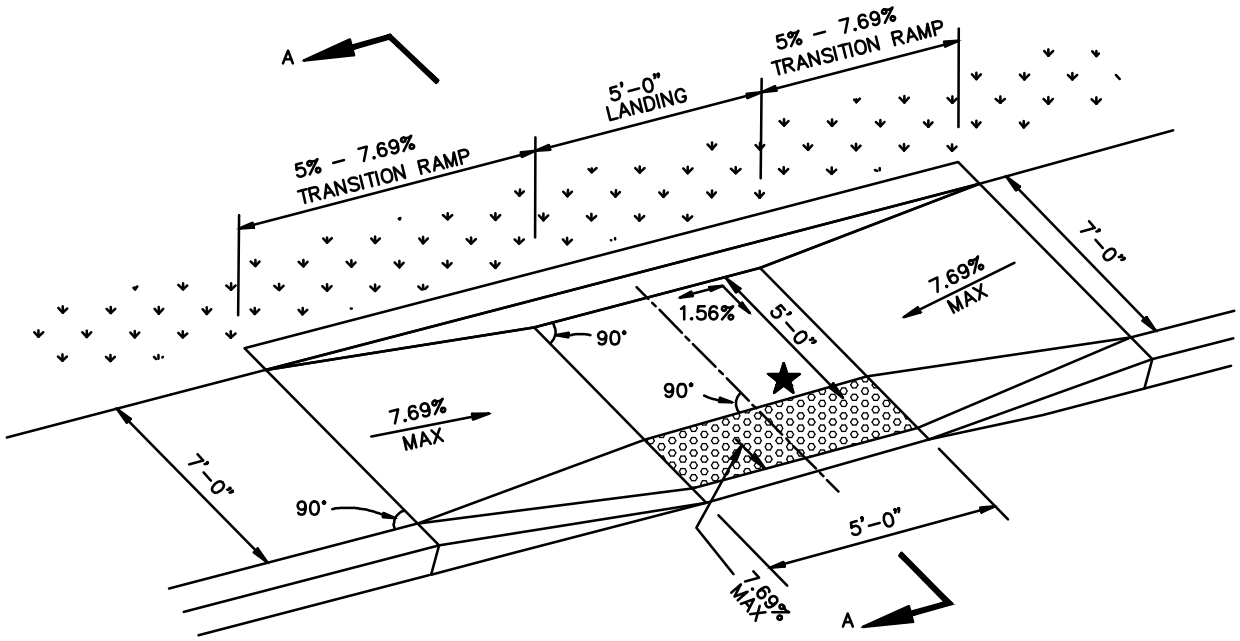

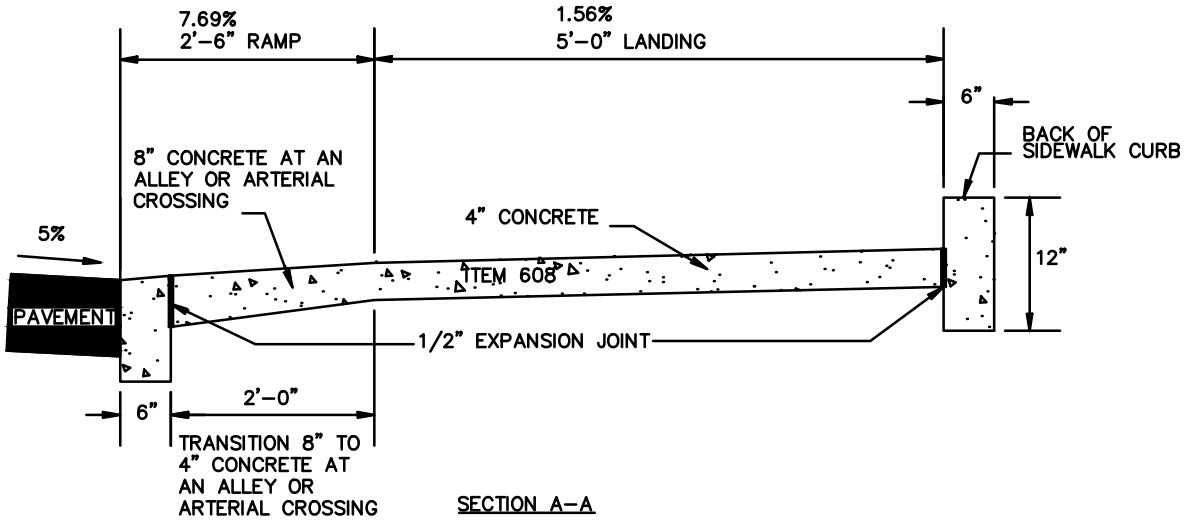

SECTION A–A

THE 5% MAXIMUM COUNTERSLOPE WHERE THE BOTTOM OF THE RAMP MEETS THE STREET APPLIES TO BOTH STRAIGHT CURB AND CURB AND GUTTER SECTIONS

★ SEE SHEET 12/12 FOR DETECTABLE WARNING DETAILS

	CURB RAMP TYPE P1	CITY OF HILLIARD, OHIO
DATE: March 6, 2015	COMBINED PERPENDICULAR & PARALLEL RAMP	STANDARD CONSTRUCTION DRAWING
SCALE: NTS		9/12 CR–1

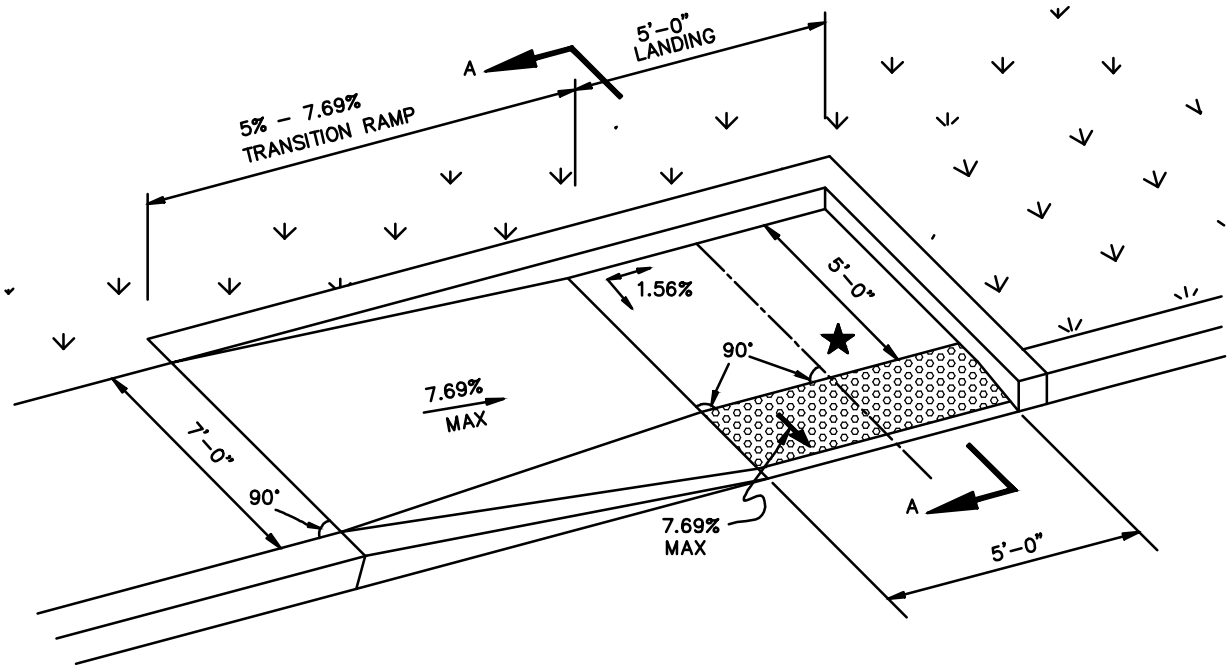

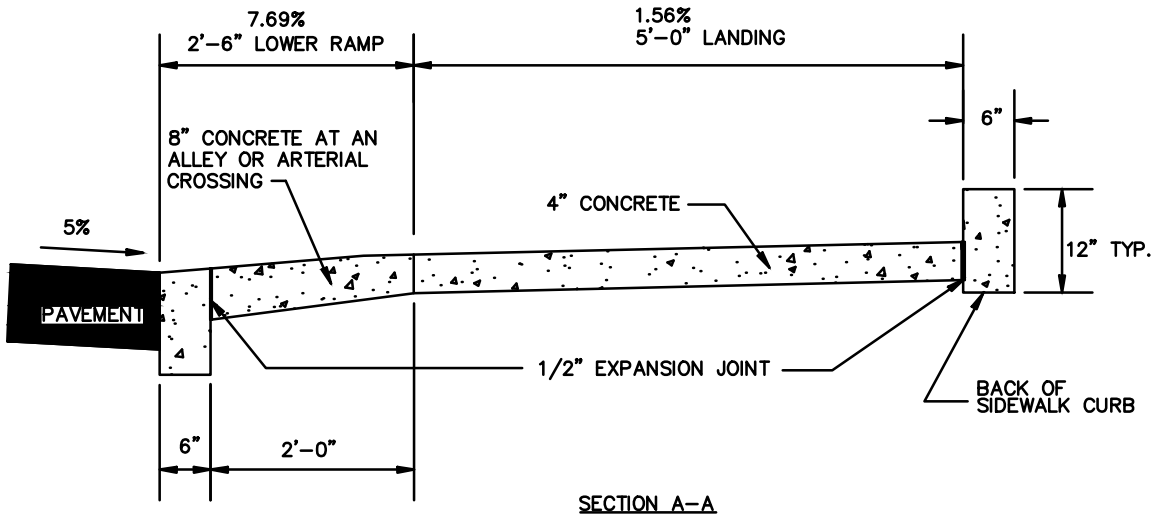

SECTION A–A

THE 5% MAXIMUM COUNTERSLOPE WHERE THE BOTTOM OF THE RAMP MEETS THE STREET APPLIES TO BOTH STRAIGHT CURB AND CURB AND GUTTER SECTIONS

★ SEE SHEET 12/12 FOR DETECTABLE WARNING DETAILS

	CURB RAMP TYPE P2	CITY OF HILLIARD, OHIO	
DATE: March 6, 2015	COMBINED PERPENDICULAR & PARALLEL RAMP IN ONE DIRECTION	STANDARD CONSTRUCTION DRAWING	
SCALE: NTS		10/12	CR–1

NOTES

1. DETECTABLE WARNINGS SHALL BE PROVIDED WHEREVER A CURB RAMP CROSSES A VEHICULAR WAY. EXCLUDING UNSIGNALIZED DRIVEWAY CROSSINGS. SEE #19 OF GENERAL CURB RAMP NOTES.

2. DETECTABLE WARNINGS SHALL BE PROVIDED 24" IN THE DIRECTION OF TRAVEL AND EXTEND THE FULL WIDTH OF THE CURB RAMP OR FLUSH SURFACE. THE DETECTABLE WARNING SHALL BE LOCATED ADJACENT TO THE CURB LINE.

3. DETECTABLE WARNINGS SHALL BE PLACED 6" TO 8" BEHIND THE FACE OF CURB AND BEHIND CURB JOINT

4. CAST IN PLACE OR ANY NON-SURFACE APPLIED DETECTABLE WARNING SHALL HAVE A MIN OF 3" OF CONCRETE ON EACH SIDE OF THE WARNING.

5. MATERIALS SHALL COMPLY WITH C.O.C. SUPPLEMENTAL SPECIFICATION 1551 WITH THE FOLLOWING NOTED EXCEPTIONS:

   A. BRICK RED IS THE ONLY APPROVED COLOR UNLESS OTHERWISE APPROVED IN ADVANCE IN WRITING BY THE CITY ENGINEER

   B. TYPE "A", "B" AND "C" DETECTABLE WARNING SURFACES ARE NOT APPROVED

   C. TYPE "D" THIN TILE AND THIN MOLDED SHEET GOODS ARE APPROVED ON RETROFIT INSTALLATIONS ONLY.
      - THE PRE-APPROVED TYPE "D" MATERIAL IS "ARMOR TILE TACTILE SYSTEMS" FLAT SURFACE APPLIED MAT.
      - OTHER MATERIALS MAY BE SUBSTITUTED FOR THIS PRODUCT IF PRIOR APPROVAL IS GRANTED TO THE CITY ENGINEER

   D. TYPE "E" PRE-MANUFACTURED WET-SET PROJECTS ARE APPROVED FOR USE ON NEW CONSTRUCTION ONLY. THESE PRODUCTS MUST BE 24" WIDE AND ½" THICK. ONE PIECE PANELS SHOULD BE USED FOR SIDEWALK INSTALLATIONS. ALL PRODUCTS MUST BE APPLIED ACCORDING TO THE MANUFACTURER'S SPECIFICATIONS AND GUIDELINES. THE TYPE "E" PRODUCTS PRE-APPROVED FOR USE IN THE CITY OF HILLIARD ARE LISTED BELOW.

      - ENGINEERED PLASTICS, INC. – ARMOR-TILE CAST IN PLACE SYSTEMS
      - ADA SOLUTIONS, INC. – COMPOSITE (WET SET) REPLACEABLE TWS UNIT
      - ARMORCAST PRODUCTS COMPANY – CAST IN PLACE DETECTABLE WARNING PANEL
      - OTHER MATERIALS MAY BE SUBSTITUTED FOR THE ABOVE LISTED PRODUCTS IF PRIOR APPROVAL IS GRANTED BY THE CITY ENGINEER.

   E. DETECTABLE WARNINGS SHALL EXTEND THE ENTIRE WIDTH OF THE CURB RAMP FOR SIDEWALKS AND MULTI-USE PATHS LOCATED PARALLEL TO A PUBLIC STREET (SIDE PATHS).

   F. DETECTABLE WARNING STRIPS MUST COMPLY WITH ADA SPECIFICATIONS FOR RAMP AREA, INCLUDING RUNNING SLOPE, CROSS-SLOPE, FLATNESS AND SMOOTHNESS CRITERIA AS WELL AS FLUSH TRANSITIONS BETWEEN THE CONCRETE RAMP AND THE DETECTABLE WARNING SURFACE.

   G. ALL DETECTABLE WARNING STRIP INSTALLATIONS SHALL BE WARRANTED BY THE INSTALLING CONTRACTOR AND MANUFACTURER TO BE FREE OF DEFECTS FOR A PERIOD OF THREE (3) YEARS FROM THE DATE OF INSTALLATION. THE DETECTABLE WARNING STRIP SHALL LOSE NO MORE THAN FIVE PERCENT (5.0 %) OF TRUNCATED DOMES DUE TO DELAMINATION BECAUSE OF PRODUCT FAILURE. SURFACE SHALL BE WARRANTED FOR THAT 3-YEAR PERIOD FROM FADING, CHIPPING, CRACKING, PEELING, OR LOSS OF COLOR DUE TO THE EXPOSURE TO WEATHERING, DE-ICING SALTS, AND SUNLIGHT.

	CURB RAMP DETECTABLE WARNING NOTES	CITY OF HILLIARD, OHIO
DATE: March 6, 2015		STANDARD CONSTRUCTION DRAWING
SCALE: NTS		11/12 CR-1

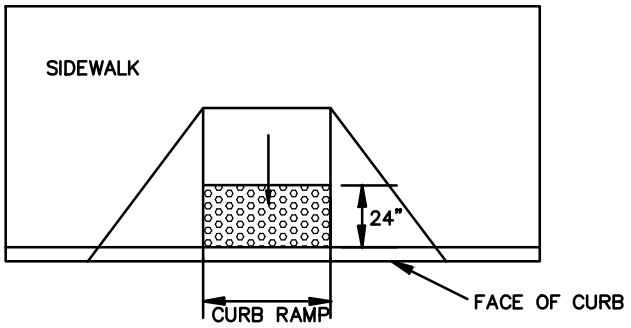

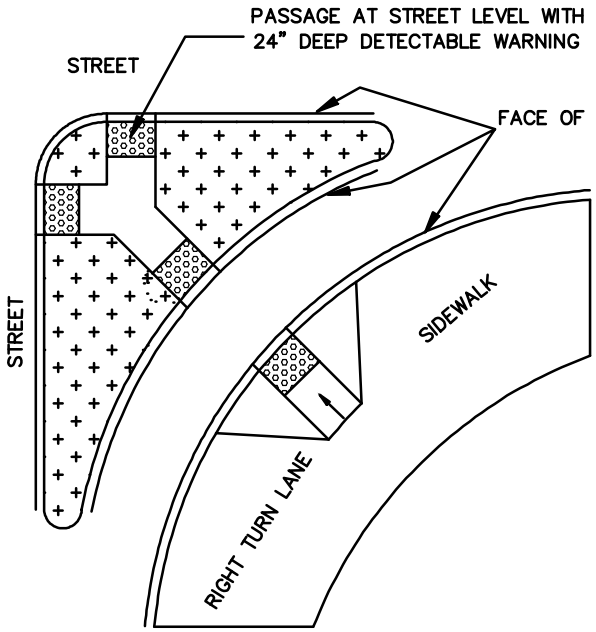

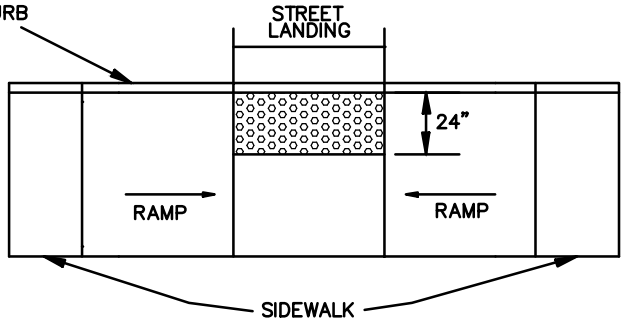

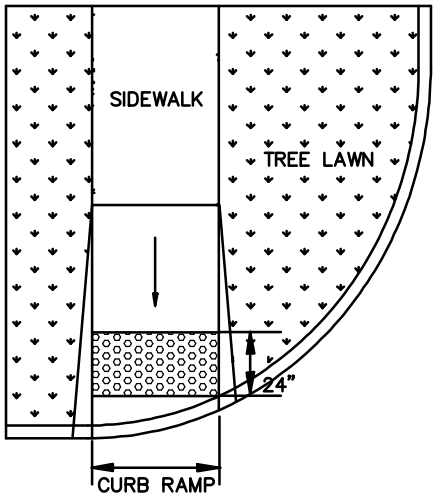

	CURB RAMP	CITY OF HILLIARD, OHIO
DATE: March 6, 2015	DETECTABLE WARNINGS	STANDARD CONSTRUCTION DRAWING
SCALE: NTS		12/12 CR-1

City of Hilliard Sign Specifications

Street Name Signs - General Specifications

Plan Designation: Item 630 Street Name Sign, Type ( ), As Per Plan

Plan Unit: Per Each

Plan Payment: Payment for each street name sign shall include brackets, stiffeners, stickers, and all incidental hardware to mount the street name sign(s) on the designated support type.

Submittals: Sign Fabricator shall submit preliminary layout of street name signs to the City of Hilliard Engineer (lschamp@hilliardohio.gov) or the City of Hilliard sign shop (signshop@hilliardohio.gov) before manufacturing signs. Layout shall be to scale and shall include all dimensions. Failure to submit a scaled layout could result in rejection of the street name sign and replacement will be at the manufacturer's expense.

New Street Name Approval & Submittals: All new street names shall be submitted to the City of Hilliard for pre-approval (email: mkelnhofer@hilliardohio.gov). For any street name greater than ten (10) characters (including prefix or suffix), a sign layout in accordance with these specifications shall be submitted prior to pre-approval of a new street name to ensure that the street name can adequately fit on the maximum sign blade without modification to font, lettering size, or standard spacing.

The following specifications apply to all street name signs in the City of Hilliard:

- All street name signs shall be made on an aluminum sign blank (0.0080 thickness).
- All street name signs shall use a white retroreflective sheeting made with prisms (ASTM D4956 Type IV or VIII as designated for each sign type provided below) with a blue electrocut film (color: 1175 - FHWA Blue) to create a blue sign with white lettering.
- Street name legends, prefixes, and suffixes shall be printed Federal Highway Administration, Office of Transportation Operations' Clearview Font Type 2-W using standard letter spacing. Legends, prefixes, and suffixes shall be centered horizontally and vertically on the sign face. If a street name contains a drop letter (y, p, j, etc.), the name shall be shifted ½" up on the sign face. Lettering sizes and clear spacing shall conform to the various sign types provided below.
- A modified Clearview Font is only permitted for existing street names in order to fit on the maximum sign blades designated for the various sign types provided below. All new street names shall comply with the standard provisions established herein.
- All street name sign installations shall include a City of Hilliard identification sticker, which provides the month and year that the sign is installed. Stickers shall be obtained from the City of Hilliard sign shop (contact: Dave Dale - (614) 334-2355).

	TRAFFIC CONTROL NOTES AND DETAILS	CITY OF HILLIARD, OHIO	
DATE: April 1, 2015	STREET NAME SIGNS	STANDARD CONSTRUCTION DRAWING	
SCALE: N.T.S.	GENERAL SPECIFICATIONS	1/10	TC-1

City of Hilliard Sign Specifications

Street Name Signs - General Specifications (cont.)

These standards shall apply to all public street intersections and to intersections of a public street with a named private driveway. Non-reflective public or private street name signs within the public right-of-way are prohibited on new installations. Existing street name signs that do not meet these standards shall be upgraded as part of the normal city sign maintenance schedule.

- At locations where a named private driveway intersects a public street, the word "Private" shall be positioned beneath the private street name as shown in the example below.

	TRAFFIC CONTROL NOTES AND DETAILS	CITY OF HILLIARD, OHIO
DATE: April 1, 2015	STREET NAME SIGNS	STANDARD CONSTRUCTION DRAWING
SCALE: N.T.S.	GENERAL SPECIFICATIONS	2/10 TC-1

City of Hilliard Street Name Sign Matrix

		Installation			Post, Anchor & Bracket			Sign Size & Layout				
Type of Intersection	Speed Limit of Major Street	Type of Mounting	Number of signs per Intersection (min)	Vertical Clearance of Sign from Street	Post Type (galvanized; black in Old Hilliard)	Anchor Type (galvanized)	Bracket Type (galvanized; black in Old Hilliard)	Sign Blade Height	Sign Blade Max Length	Initial Upper Case Letter Height	1/2-Inch Rounded Border	Single or Double Sided
Type A - Signalized - Mast Arm (all new City signal installations)	Any	Overhead (On Mast Arm)	one per arm	on arm	N/A	N/A	Band or Cable-Mntd	20"	96"	12"	Yes	Single
Type B - Signalized - Strain Pole (existing signals or former FCEO signals)	Any	Side/Corner (On Strain Pole)	2 signs on 2 poles (opposite corners)	15'	N/A	N/A	2 cantilevered brackets & double-tee stiffeners (4 bands per sign)	20"	72"	9"	No	Double
Type C - Roundabout	Any	2 Posts per sign (in splitter islands)	one sign per splitter island	5'	2" square x 14 gauge galvanized w/ rain caps	2-1/4" square x 42" long; 8" min lap	N/A	16"	72"	7"	Yes (& chevron-arrow)	Single
Type D - Unsignalized - Arterial or Collector - high speed (includes subdivision street at Arterial/Collector - e.g. Dublin Rd cross streets)	40+ MPH	Side/Corner & Cantilevered (On Post)	1 sign @ T intersection; 2 signs @ X intersection	12'	2" square x 12 gauge galvanized w/ rain caps	2-1/4" square x 48" long; 18" min lap	2 cantilevered brackets & double-tee stiffeners	16"	72"	8"	No	Double
Type E - Unsignalized - Arterial or Collector - low speed (includes subdivision street at Arterial/Collector - e.g. Cemetery Rd cross streets)	25 - 35 MPH	Side/Corner & Cantilevered (On Post)	1 sign @ T intersection; 2 signs @ X intersection	12'	2" square x 12 gauge galvanized w/ rain caps	2-1/4" square x 48" long; 18" min lap	2 cantilevered brackets & double-tee stiffeners	12"	72"	6"	No	Double
Type F - Unsignalized - Subdivision (e.g. internal subdivision streets - not primary street intersection with arterial or collector)	25 MPH	Side/Corner & Cross-Mounted (On Post)	One (2 if street name changes at cross street)	10'	2" square x 12 gauge galvanized - without rain caps	2-1/4" square x 30" long; 8" min lap	12" square post bracket & 12" cross piece bracket	9"	60"	5"	Yes	Double

Notes:

1. This table is provided for easy reference. Designer, contractors and sign manufacturers should refer to Hilliard Standard Drawing TC-1 for sign specification details.

2. SNS legends, prefixes, and suffixes shall be printed in FHWA **Clearview Font Type 2-W** using standard horizontal letter spacing and edge spacing. Lettering size and space reductions are permitted only on existing street names. New subdivision street names shall comply with all standards.

DRAFT - 4/2/2015

P:\6000_6100\6057\130011_Hilliard Code\Design\Standard Dwgs\Hilliard SNS Matrix-2011.xls

DATE: April 1, 2015	TRAFFIC CONTROL NOTES AND DETAILS	CITY OF HILLIARD, OHIO	
	STREET NAME SIGNS	STANDARD CONSTRUCTION DRAWING	
SCALE: N.T.S.	REFERENCE TABLE	3/10	TC-1

Type A Street Name Signs

Type A signs are to be installed at all signalized intersections with mast arms.

Installation. Signs shall be mounted on the mast arm. The preferred location is centered between signal heads as far left as possible over the oncoming lanes of traffic. One sign per arm.

Brackets. No brackets are required for Type A installations. Each sign shall be mounted to the arm using a band or cable-mounted system (Astro-Brac or approved equal).

Sign Size. The sign blade shall be 20" high. Maximum sign blade length shall be 96".

Sign Material. Sign sheeting material shall comply with ASTM D4956 Type VIII (3M Diamond Grade LDP 3970, Avery Dennison MVP Prismatic T-7500, or approved equal).

Sign Layout. The initial upper case letter height shall be 12". Prefixes and suffixes shall be the same size as the legend. A ½-inch white border with rounded corners shall be provided. A 4 ½ -inch clear space shall be provided between the edge of the sign and the edge of the first and last letter (horizontally). The sign shall be single sided with the backs of the signs painted black.

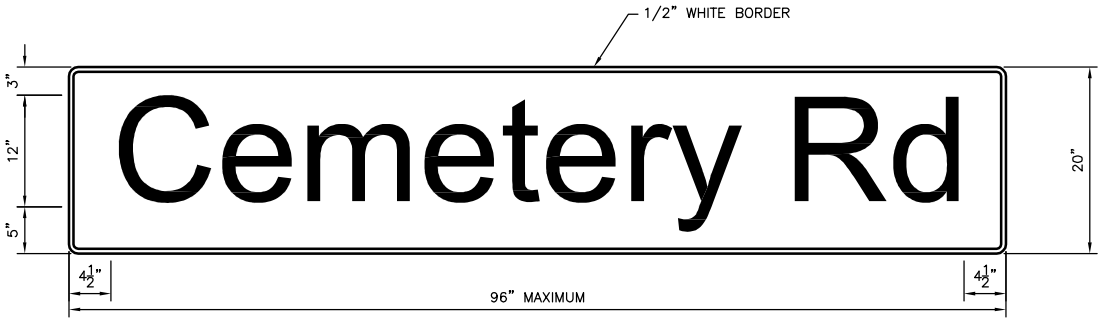

	TRAFFIC CONTROL NOTES AND DETAILS	CITY OF HILLIARD, OHIO
DATE: April 1, 2015	STREET NAME SIGNS	STANDARD CONSTRUCTION DRAWING
SCALE: N.T.S.	TYPE A	4/10 TC-1

Type B Street Name Signs

Type B signs are to be installed at all signalized intersections with strain poles.

Installation. Signs shall be mounted on opposite corners on the traffic signal strain pole. Judgment may be used in determining the appropriate location based on visibility. Two signs may be installed per pole. The vertical clearance between the adjacent ground and the bottom of the lowest sign shall be 15 feet.

Brackets. Two cantilevered square brackets and double tee stiffeners (Sign-Fix, Xcessories Squared, or approved equal) shall be used. Each sign shall be banded to the vertical pole using four bands.

Sign Size. The sign blade shall be 20" high. Maximum sign blade length shall be 72".

Sign Material. Sign sheeting material shall comply with ASTM D4956 Type VIII (3M Diamond Grade LDP 3970, Avery Dennison MVP Prismatic T-7500, or approved equal).

Sign Layout. The initial upper case letter height shall be 9". Prefixes and suffixes shall be the same size as the legend. No border shall be used for signs that use cantilevered brackets for installation. A 4-inch clear space shall be provided between the edge of the sign and the edge of the first and last letter (horizontally). The sign shall be double sided.

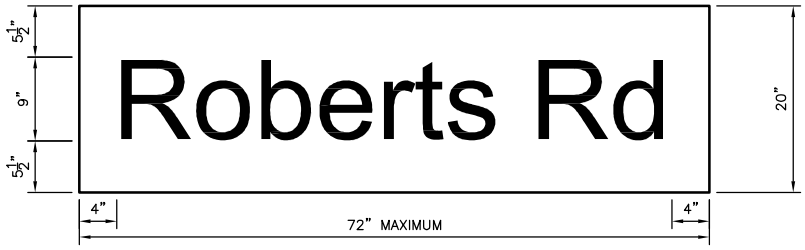

DATE: April 1, 2015	TRAFFIC CONTROL NOTES AND DETAILS STREET NAME SIGNS	CITY OF HILLIARD, OHIO STANDARD CONSTRUCTION DRAWING
SCALE: N.T.S.	TYPE B	5/10 TC-1

Type C Street Name Signs

Type C signs are to be installed at all roundabout locations.

Installation. Signs shall be mounted in the splitter islands with one sign per island at each leg of the roundabout. The vertical clearance between the adjacent top of curb and the bottom of the sign shall be 5 feet. The horizontal clearance between the edge of the sign and the face of the splitter island curb shall be 2' minimum.

Brackets. No brackets are used for Type C sign installations.

Post/Anchor. Type C street name sign supports shall be two 2-inch square x 14 gauge square galvanized posts with die-cut knock-outs (typical regulatory sign posts). Pyramid rain caps shall be used. A single break-away anchor shall be used for each post. Anchors shall be 2 ¼-inch square, 42 inches long, and embedded such that 2 inches of the anchor remains above ground level. The overlap of the post within the anchor sleeve shall be 8 inches minimum.

Sign Size. The sign blade shall be 16" high. Maximum sign blade length shall be 72".

Sign Material. Sign sheeting material shall comply with ASTM D4956 Type VIII (3M Diamond Grade LDP 3970, Avery Dennison MVP Prismatic T-7500, or approved equal).

Sign Layout. The initial upper case letter height shall be 7". Prefixes and suffixes shall be the same size as the legend. A ½-inch white border with rounded corners and a chevron-style arrow shall be provided. A 3 ½ -inch clear space shall be provided between the edge of the sign and the edge of the first (horizontally). The sign shall be single sided.

	TRAFFIC CONTROL NOTES AND DETAILS	CITY OF HILLIARD, OHIO
DATE: April 1, 2015	STREET NAME SIGNS	STANDARD CONSTRUCTION DRAWING
SCALE: N.T.S.	TYPE C	6/10 TC-1

Type D Street Name Signs

Type D signs are to be installed at unsignalized intersections along arterial or collector streets with speed limits of 40 mph or greater. This includes intersections of a primary subdivision street and the arterial/collector street. Examples include the intersections of Alton Darby Road/Strider Lane and Dublin Road/River Landings Blvd.

Installation. At four-way intersections, two pairs of signs should be installed, mounted on opposite corners. At three-way (tee) intersections, one pair of signs should be installed. Judgment may be used in determining the appropriate location based on visibility. Two signs should be installed per pole. The vertical clearance between the adjacent ground and the bottom of the lowest sign shall be 12 feet. Signs shall be erected so that one sign does not block visibility of the other sign.

Brackets. Two cantilevered square brackets and double tee stiffeners (Sign-Fix, Xcessories Squared, or approved equal) shall be used.

Post/Anchor. Type D street name sign supports shall be 2-inch square x 12 gauge square galvanized posts with die-cut knock-outs. Pyramid rain caps shall be used. A single break-away anchor shall be used. Anchors shall be 2 ¼-inch square, 48 inches long, and embedded such that 2 inches of the anchor remains above ground level. The overlap of the post within the anchor sleeve shall be 18 inches minimum.

Sign Size. The sign blade shall be 16" high. Maximum sign blade length shall be 72".

Sign Material. Sign sheeting material shall comply with ASTM D4956 Type VIII (3M Diamond Grade LDP 3970, Avery Dennison MVP Prismatic T-7500, or approved equal).

Sign Layout. The initial upper case letter height shall be 8". Prefixes and suffixes shall be the same size as the legend. No border shall be used for signs that use cantilevered brackets for installation. A 4-inch clear space shall be provided between the edge of the sign and the edge of the first and last letter (horizontally). The sign shall be double sided.

	TRAFFIC CONTROL NOTES AND DETAILS	CITY OF HILLIARD, OHIO
DATE: April 1, 2015	STREET NAME SIGNS	STANDARD CONSTRUCTION DRAWING
SCALE: N.T.S.	TYPE D	7/10 TC-1

Type E Street Name Signs

Type E signs are to be installed at unsignalized intersections along arterial or collector streets with speed limits of 35 mph or less. This includes intersections of a primary subdivision street and the arterial/collector street. Examples include the intersections of Avery Rd/Dixon Dr, Davidson Road/Heather Ridge Dr, and Scioto Darby Rd/Hoffman Farms Dr.

Installation. At four-way intersections, two pairs of signs should be installed, mounted on opposite corners. At three-way (tee) intersections, one pair of signs should be installed. Judgment may be used in determining the appropriate location based on visibility. Two signs should be installed per pole. The vertical clearance between the adjacent ground and the bottom of the lowest sign shall be 12 feet. Signs shall be erected so that one sign does not block visibility of the other sign.

Brackets. Two cantilevered square brackets and double tee stiffeners (Sign-Fix, Xcessories Squared, or approved equal) shall be used.

Post/Anchor. Type E street name sign supports shall be 2-inch square x 12 gauge square galvanized posts with die-cut knock-outs. Pyramid rain caps shall be used. A single break-away anchor shall be used. Anchors shall be 2 ¼-inch square, 48 inches long, and embedded such that 2 inches of the anchor remains above ground level. The overlap of the post within the anchor sleeve shall be 18 inches minimum.

Sign Size. The sign blade shall be 12" high. Maximum sign blade length shall be 72".

Sign Material. Sign sheeting material shall comply with ASTM D4956 Type VIII (3M Diamond Grade LDP 3970, Avery Dennison MVP Prismatic T-7500, or approved equal).

Sign Layout. The initial upper case letter height shall be 6". Prefixes and suffixes shall be the same size as the legend. No border shall be used for signs that use cantilevered brackets for installation. A 3-inch clear space shall be provided between the edge of the sign and the edge of the first and last letter (horizontally). The sign shall be double sided.

	TRAFFIC CONTROL NOTES AND DETAILS	CITY OF HILLIARD, OHIO
DATE: April 1, 2015	STREET NAME SIGNS	STANDARD CONSTRUCTION DRAWING
SCALE: N.T.S.	TYPE E	8/10 TC-1

Type F Street Name Signs

Type F signs are to be installed at unsignalized intersections within subdivisions with speed limits of 25 mph only. Type F signs apply to internal neighborhood streets, not the intersection of the primary subdivision street and the arterial/collector street.

Installation. One pair of signs should be installed unless the street name changes on either side of a street. Judgment may be used in determining the appropriate location based on visibility. Two signs should be installed per post. The vertical clearance between the adjacent ground and the bottom of the lowest sign shall be 10 feet.

Brackets. One 12-inch square post bracket and one 12-inch cross piece bracket shall be used. Note: Type F signs are mounted using a cross-mounted system, not cantilevered like Type D and Type E street name signs.

Post/Anchor. Type F street name sign supports shall be 2-inch square x 12 gauge square galvanized posts with die-cut knock-outs. Pyramid rain caps are not used. A single break-away anchor shall be used. Anchors shall be 2 ¼-inch square, 30 inches long, and embedded such that 2 inches of the anchor remains above ground level. The overlap of the post within the anchor sleeve shall be 8 inches minimum.

Sign Size. The sign blade shall be 9" high. Maximum sign blade length shall be 60".

Sign Material. Sign sheeting material shall comply with ASTM D4956 Type IV (3M High Intensity Prismatic 3930, Avery Dennison High Intensity Prismatic T-6500, or approved equal).

Sign Layout. The initial upper case letter height shall be 5". Prefixes and suffixes shall be the same size as the legend. A ½-inch white border with rounded corners shall be provided. A 2 ½ -inch clear space shall be provided between the edge of the sign and the edge of the first and last letter (horizontally). The sign shall be double sided.

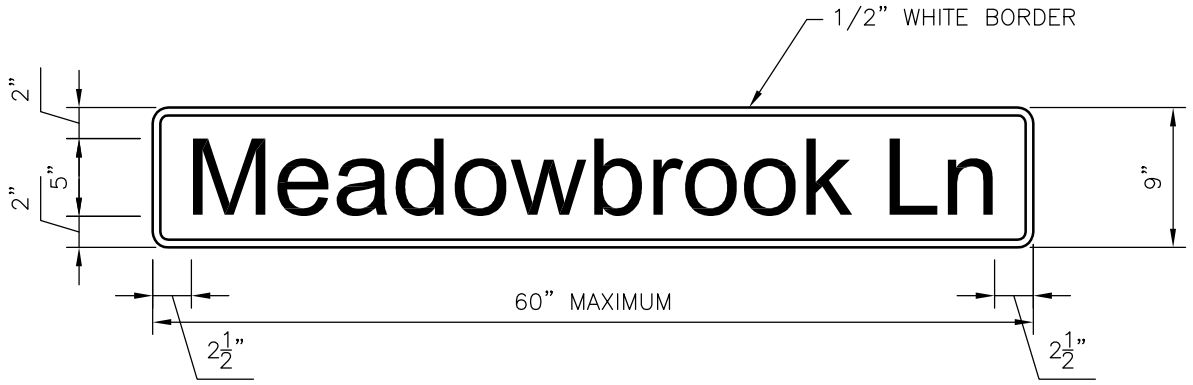

	TRAFFIC CONTROL NOTES AND DETAILS	CITY OF HILLIARD, OHIO
DATE: April 1, 2015	STREET NAME SIGNS	STANDARD CONSTRUCTION DRAWING
SCALE: N.T.S.	TYPE F	9/10 TC-1

Street Name Sign Support and Anchor Specifications

Plan Designation: Item 630 Street Name Sign Support and Anchor (Type ___), As Per Plan

Plan Unit: Per Each

Plan Payment: Payment for each street name sign support shall include the appropriate length anchor and the appropriate post length required to obtain the required minimum lap length and the proper vertical clearance for the various street name sign types. Payment for the sign supports shall include the pyramid rain caps, rivets, bolts, nuts, and all incidental hardware needed for a complete installation.

Type A Street Name Sign Supports and Anchors. Type A street name signs are installed on mast arms at signalized intersections. A separate support and anchor are not required.

Type B Street Name Sign Supports and Anchors. Type B street name signs are installed on strain poles at signalized intersections. A separate support and anchor are not required.

Type C Street Name Sign Supports and Anchors. Type C street name sign supports shall be two 2-inch square x 14 gauge square galvanized posts with die-cut knock-outs (typical regulatory sign posts). Pyramid rain caps shall be used. A single break-away anchor shall be used for each post. Anchors shall be 2 ¼-inch square, 42 inches long, and embedded such that 2 inches of the anchor remains above ground level. The overlap of the post within the anchor sleeve shall be 8 inches minimum.

Type D Street Name Sign Supports and Anchors. Type D street name sign supports shall be 2-inch square x 12 gauge square galvanized posts with die-cut knock-outs. Pyramid rain caps shall be used. A single break-away anchor shall be used. Anchors shall be 2 ¼-inch square, 48 inches long, and embedded such that 2 inches of the anchor remains above ground level. The overlap of the post within the anchor sleeve shall be 18 inches minimum.

Type E Street Name Sign Supports and Anchors. Type E street name sign supports shall be 2-inch square x 12 gauge square galvanized posts with die-cut knock-outs. Pyramid rain caps shall be used. A single break-away anchor shall be used. Anchors shall be 2 ¼-inch square, 48 inches long, and embedded such that 2 inches of the anchor remains above ground level. The overlap of the post within the anchor sleeve shall be 18 inches minimum.

Type F Street Name Sign Supports and Anchors. Type F street name sign supports shall be 2-inch square x 12 gauge square galvanized posts with die-cut knock-outs. Pyramid rain caps are not used. A single break-away anchor shall be used. Anchors shall be 2 ¼-inch square, 30 inches long, and embedded such that 2 inches of the anchor remains above ground level. The overlap of the post within the anchor sleeve shall be 8 inches minimum.

Old Hilliard District. In the Old Hilliard District, the above street name sign support and anchor specifications apply except all sign supports and hardware shall be black.

Conservation District. In the Conservation District, the type C-F street name sign support and anchor specifications for unsignalized intersections are per Hilliard standard construction drawing TC-3. The vertical clearance and installation requirements provided herein in the table on sheet 3/10 apply.

	TRAFFIC CONTROL NOTES AND DETAILS	CITY OF HILLIARD, OHIO
DATE: April 1, 2015	STREET NAME SIGNS	STANDARD CONSTRUCTION DRAWING
SCALE: N.T.S.	SUPPORT & ANCHOR SPECIFICATIONS	10/10 TC–1

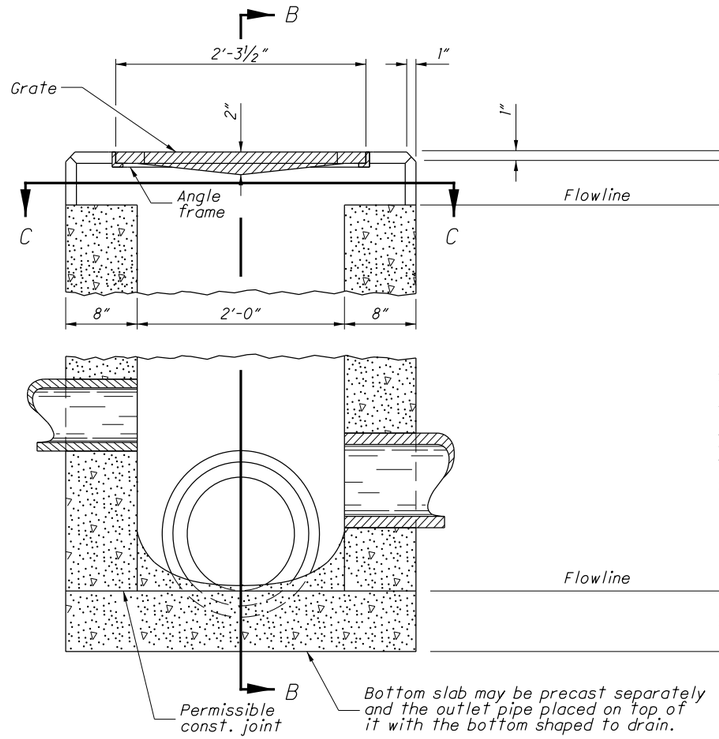

SECTION A-A

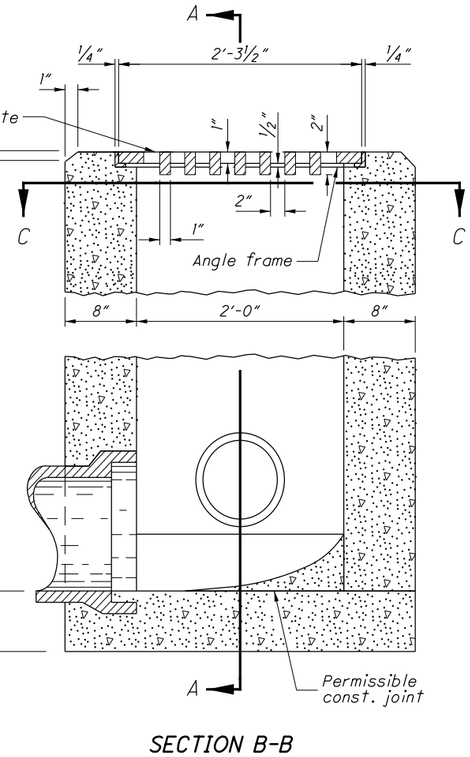

SECTION B-B

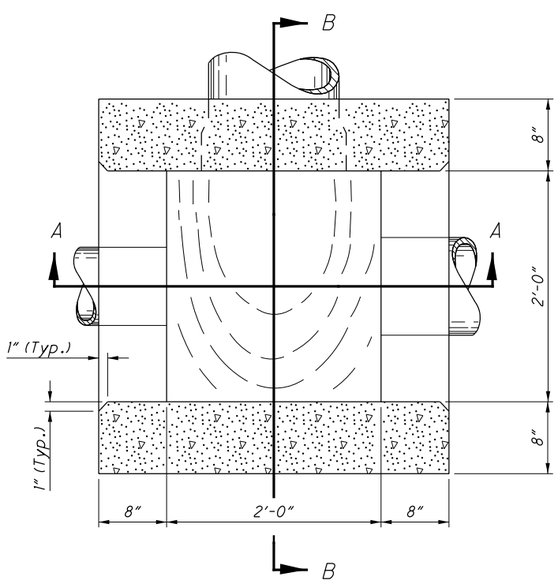

SECTION C-C

All grate edges to be rounded ¼" radii.

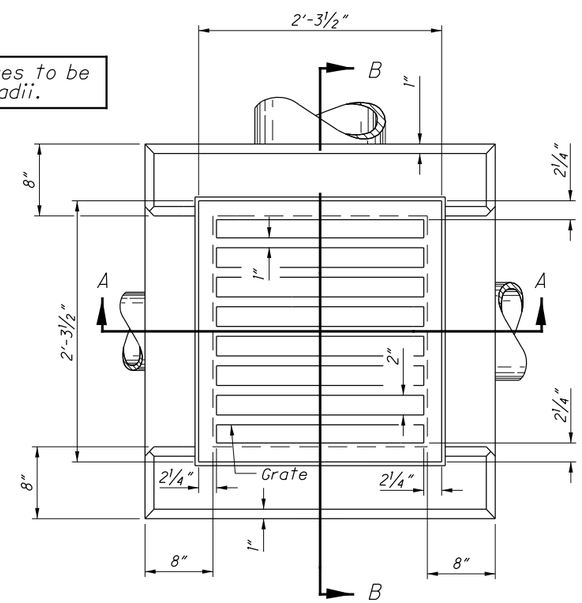

PLAN

CATCH BASIN No. 2-2A

NOTES

GENERAL: Catch Basins 2-2A and 2-2B are not intended for traffic bearing applications.

CATCH BASINS 2-2A &B: This sheet depicts Catch Basin 2-2A. See Sheet 2 of 2 for Catch Basin 2-2B.

GRATE AND FRAME: Furnish a design essentially the same and equally as strong as the one shown (see Construction Information table), or meet the requirements of CMS 711.14. Provide grate openings and dimensions as shown here unless otherwise shown in the plans.

Cast the following text into the top of the grate:

"DUMP NO WASTE" and **"DRAINS TO WATERWAY"**

Print text in bold, capital letters at least ½" high. "WATERWAY" may be substituted with "STREAM", "RIVER", "LAKE", etc. Actual placement and logo may vary per manufacturer.

WALLS: Construct brick or cast-in-place walls with a nominal 8" thickness. Provide precast walls at least 6" thick with sufficient reinforcing to permit shipping and handling without damage. Do not use brick above the flow line of the side opening for Type 2-2A.

CONCRETE: Use 4000 psi compressive strength for cast-in-place concrete. Meet the requirements of CMS 706.13 for all precast concrete and mark with the catch basin number.

PRECAST BASE: If a precast base is used, set it deep enough so that the top can be placed on the base to provide the grate elevation specified in the plans. Do not use brick layers to adjust the top elevation.

LOCATION AND ELEVATION: When given on the plans, location is the top center of the grate and the elevation is the flow line of the side inlet.

MINIMUM DEPTH: The minimum depth of CB No. 2-2A is the outside diameter (O.D.) of the outlet pipe plus 7".

OPENINGS: Obtain the Engineer's approval for any pipe openings greater than 4" from the outside of the pipe to the structure. Fill any voids per CMS 611

2-2A SIDE INLETS: Provide inlets on both sides of the No. 2-2A catch basin in sags and on upstream side only where the ditch has a continuous down grade past the catch basin. Do not use CB 2-2A within the Clear Zone. The flow line should be 4" to 6" below normal ditch returning to normal 10' to 15' each side of the inlet.

PAYMENT: All materials and labor, including excavation and backfilling, are paid for under **Item 611 - Catch Basin, No. 2-2A.**

CONSTRUCTION INFORMATION
Minimum weight of grate, 120 lbs. Minimum weight of frame, 40 lbs.

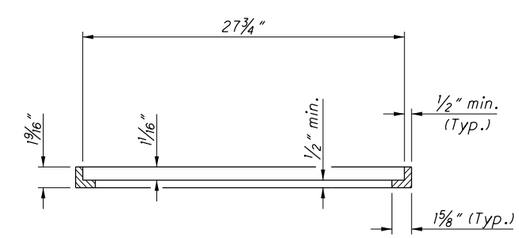

SECTION THRU ANGLE FRAME FOR STANDARD No. 2-2A CATCH BASIN

STATE OF OHIO DEPARTMENT OF TRANSPORTATION

STATE HYDRAULIC ENGINEER

REVISIONS
7-20-01
7-19-02
7-15-05
7-20-12
1-18-13

ROADWAY HYDRAULIC ENGINEER
Matt Cozzoli

OFFICE OF HYDRAULIC ENGINEERING

STANDARD HYDRAULIC CONSTRUCTION DRAWING

CATCH BASINS No's 2-2A & B

SCD NUMBER
CB-1.1

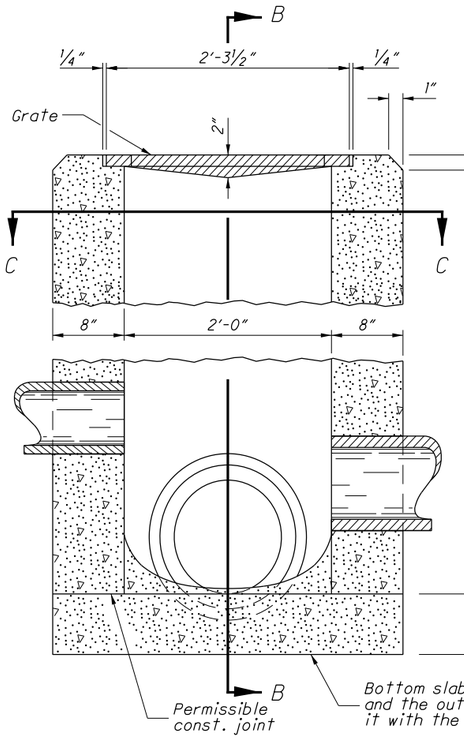

SECTION A-A

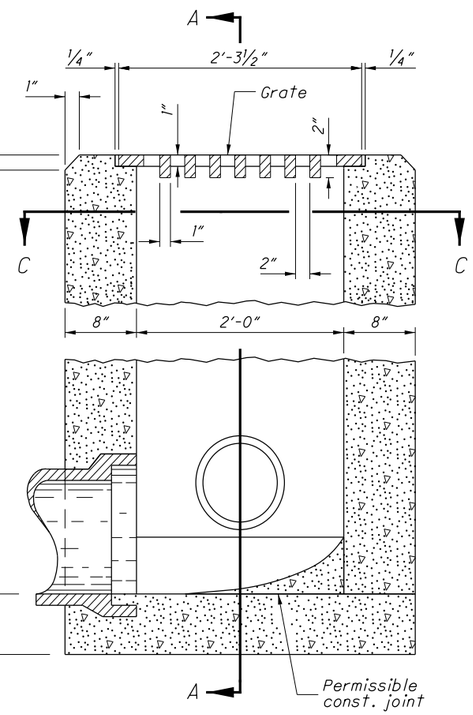

SECTION B-B

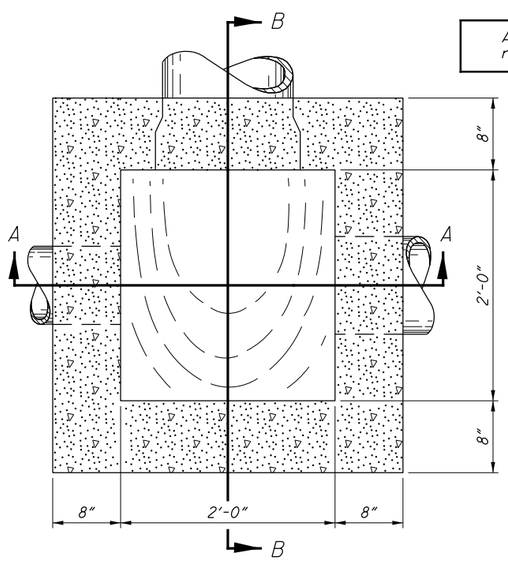

SECTION C-C

All grate edges to be rounded 1/4" radii

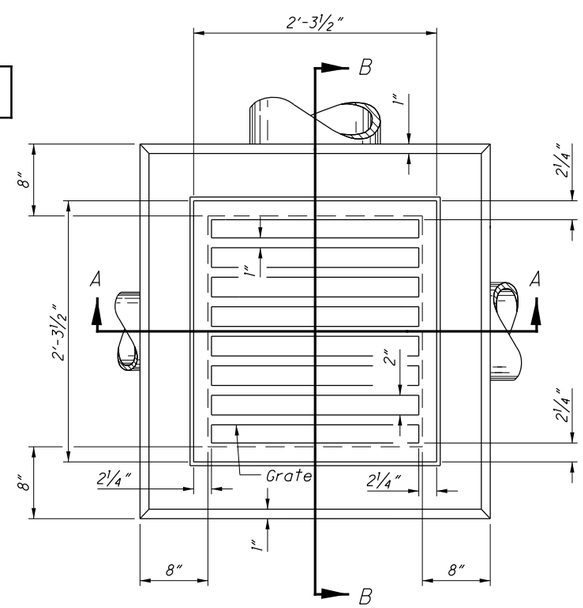

PLAN

CATCH BASIN No. 2-2B

NOTES

CATCH BASINS 2-2A & B: This sheet depicts Catch Basin 2-2B. See Sheet 1 of 2 for Catch Basin 2-2A.

GRATE: Furnish a design essentially the same and equally as strong as the one shown (see Construction Information table), or meet the requirements of CMS 711.14. Provide grate openings and dimensions as shown here unless otherwise shown in the plans.

If necessary, bicycle safe grates will be specified in the plans. Furnish Neenah No. R-4859-C or East Jordan No. 5110 Type M3 bicycle safe grates or approved equals.

Cast the following text into the top of the grate:

"DRAINS TO WATERWAY" and **"DUMP NO WASTE"**

Print text in bold, capital letters at least 1/2" high. "WATERWAY" may be substituted with "STREAM", "RIVER", "LAKE", etc. Actual placement and logo may vary per manufacturer.

WALLS: Construct brick or cast-in-place walls with a nominal 8" thickness. Provide precast walls at least 6" thick with sufficient reinforcing to permit shipping and handling without damage.

CONCRETE: Use 4000 psi compressive strength for cast-in-place concrete. Meet the requirements of CMS 706.13 for all precast concrete and mark with the catch basin number.

PRECAST BASE: If a precast base is used, set it deep enough so that the top can be placed on the base to provide the grate elevation specified in the plans. Do not use brick layers to adjust the top elevation.

LOCATION AND ELEVATION: When given on the plans, location and elevation are at the top center of the grate. When side openings are provided, the elevation is at the flow line of the side inlet.

MINIMUM DEPTH: The minimum depth of CB No. 2-2B is the outside diameter (O.D.) of the outlet pipe plus 4".

2-2B GRATE ELEVATION: Place grate elevation 4" to 6" below normal ditch and return to normal 10' to 15' each side of inlet.

OPENINGS: Obtain the Engineer's approval for any pipe openings greater than 4" from the outside of the pipe to the structure. Fill all voids per CMS 611

PAYMENT: All materials and labor, including excavation and backfilling, are paid for under **Item 611 - Catch Basin, No. 2-2B.**

CONSTRUCTION INFORMATION
Minimum weight of grate, 120 lbs.

CATCH BASIN	OUTLET PIPE SIZE
2-2A	12" to 21"
2-2B	12" to 21"

STATE OF OHIO DEPARTMENT OF TRANSPORTATION

STATE HYDRAULIC ENGINEER

REVISIONS
7-20-01
7-19-02
7-15-05
7-20-12
1-18-13

ROADWAY HYDRAULIC ENGINEER
Matt Cozzoli

OFFICE OF HYDRAULIC ENGINEERING

STANDARD HYDRAULIC CONSTRUCTION DRAWING

CATCH BASINS No's 2-2A & B

SCD NUMBER
CB-1.1

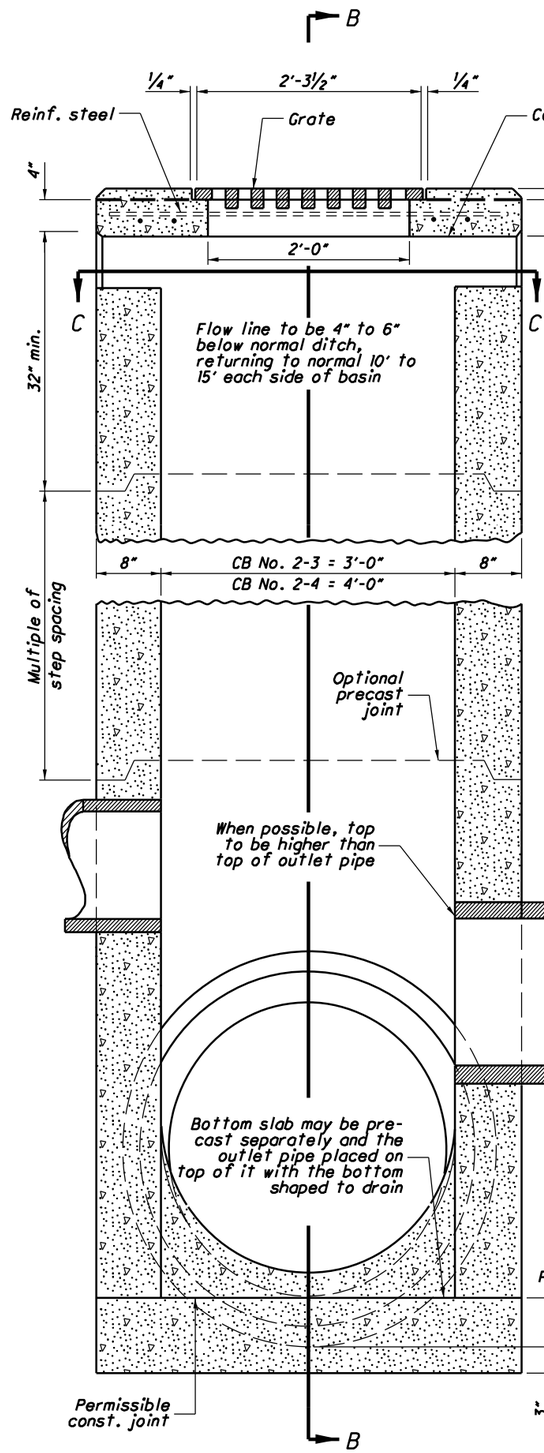

SECTION A-A

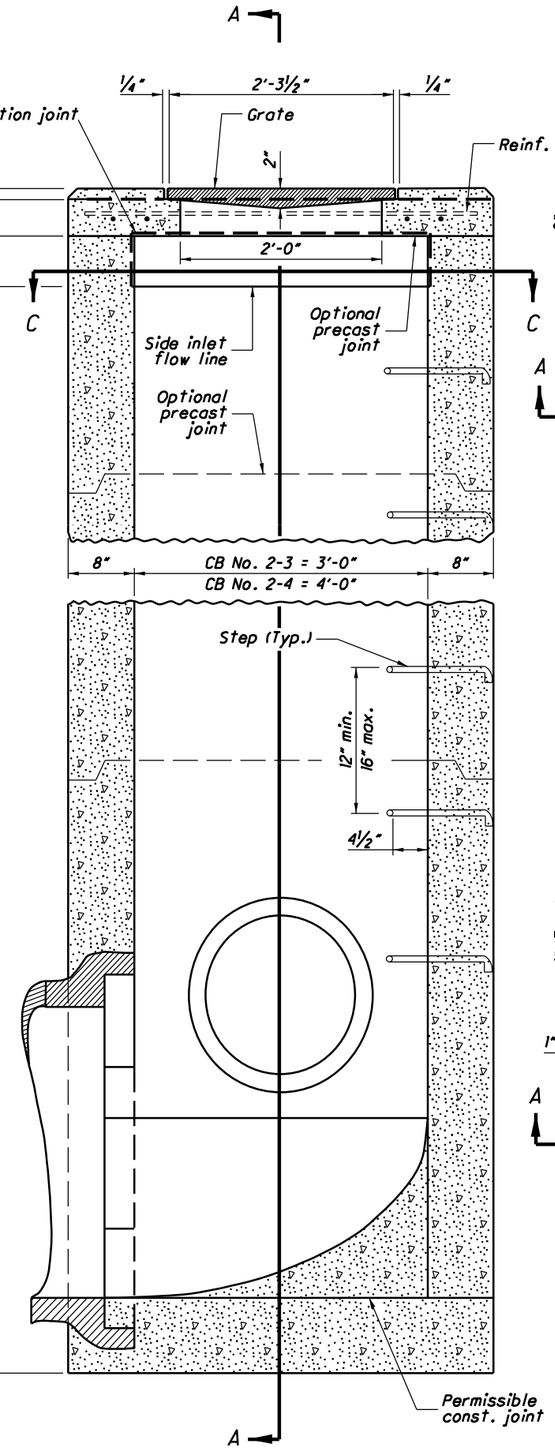

SECTION B-B

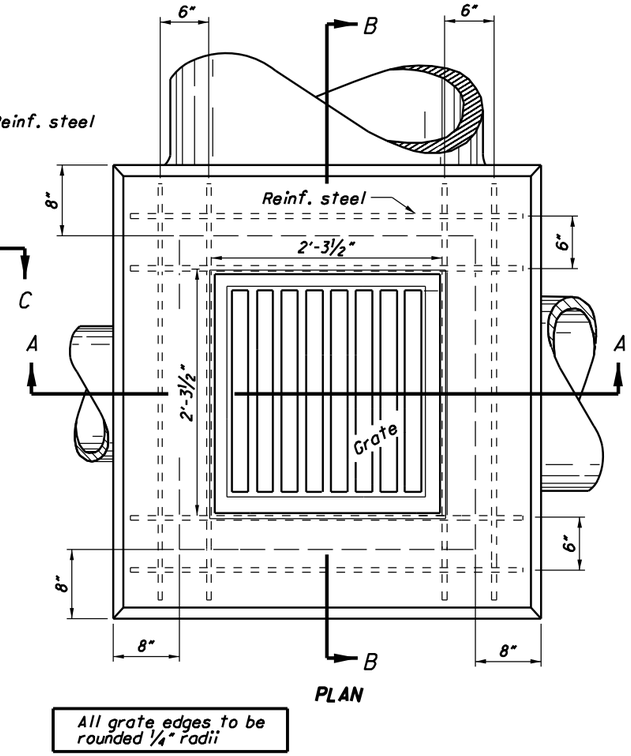

PLAN

All grate edges to be rounded 1/4" radii

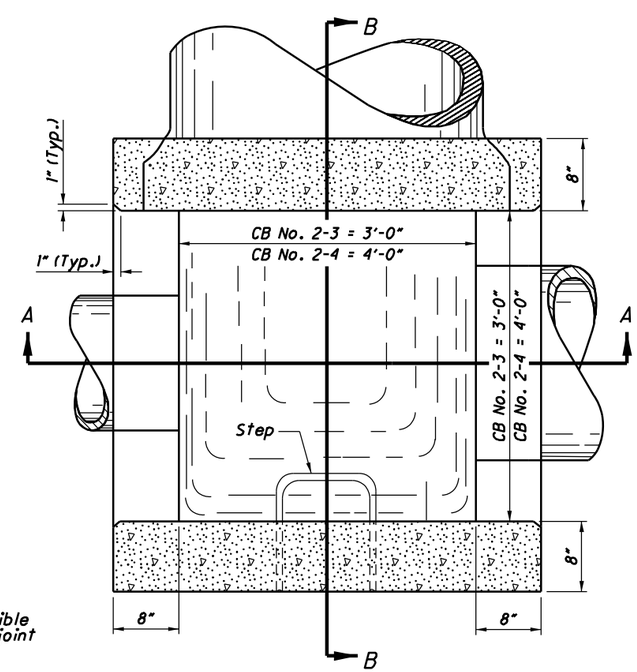

SECTION C-C

CATCH BASINS No. 2-3 & No. 2-4

NOTES

GRATE: See details on **SCD CB-1.1.**

If necessary, bicycle safe grates will be specified in the plans. Furnish Neenah No. R-4859-C or East Jordan No. 5110 Type M3 bicycle safe grates or approved equals.

Cast the following text into the top of the grate:

"DUMP NO WASTE" and **"DRAINS TO WATERWAY"**

Print text in bold, capital letters at least 1/2" high. "WATERWAY" may be substituted with "STREAM", "RIVER", "LAKE", etc. Actual placement and logo may vary per manufacturer.

WALLS: Construct brick or cast-in-place walls with a nominal 8" thickness. Provide precast walls at least 6" thick with sufficient reinforcing to permit shipping and handling without damage.

STEPS: Provide steps where the depth exceeds 6'. Meet the requirements of **SCD MH-1.1.**

CONCRETE: Use 4000 psi compressive strength for cast-in-place concrete. Meet the requirements of CMS 706.13 for all precast concrete and mark with the catch basin number.

REINFORCEMENT: Provide #4 bars spaced at 6" center to center for top reinforcing. For Catch Basin No. 2-3 use eight bars, and for Catch Basin No. 2-4 use twelve bars.

INLETS OVER 12 FEET DEEP: Use precast or cast-in-place concrete; reinforce with #4 bars on 12" centers both vertically and horizontally with 2" clearance from inside wall face.

PRECAST BASE: If a precast base is used, set it deep enough so that the top can be placed on the base to provide the grate elevation specified in the plans. Do not use brick layers to adjust the top elevation.

LOCATION AND ELEVATION: When given on the plans, the location and the elevation are at the top center of the grate. When side openings are provided, the elevation is at the flow line of the side inlet.

MINIMUM DEPTH: The minimum depth of CB No. 2-3 and CB No. 2-4 is the outside diameter (O.D.) of the outlet pipe plus 7".

OPENINGS: Obtain the Engineer's approval for any pipe openings greater than 4" from the outside of the pipe to the structure. Fill all voids per CMS 611.

SIDE INLETS: Provide inlets on both sides of the No. 2-3 and 2-4 catch basin in sags and on upstream side only where the ditch has a continuous down grade past the catch basin. Do not use catch basins with side inlets within the Clear Zone.

PAYMENT: All materials and labor, including excavation and backfill, are paid for under **Item 611 - Catch Basin, No. 2-3 or Item 611 - Catch Basin No. 2-4.**

CATCH BASIN	OUTLET PIPE SIZE
2-3	12" to 33"
2-4	36" to 42"

STATE OF OHIO DEPARTMENT OF TRANSPORTATION

STATE HYDRAULIC ENGINEER

REVISIONS
7-20-01
7-19-02
7-15-05
7-20-12
1-18-13

ROADWAY HYDRAULIC ENGINEER
Matt Cozzoli

OFFICE OF HYDRAULIC ENGINEERING

STANDARD HYDRAULIC CONSTRUCTION DRAWING

CATCH BASINS No's 2-3 & 2-4

SCD NUMBER
CB-1.2

1/1

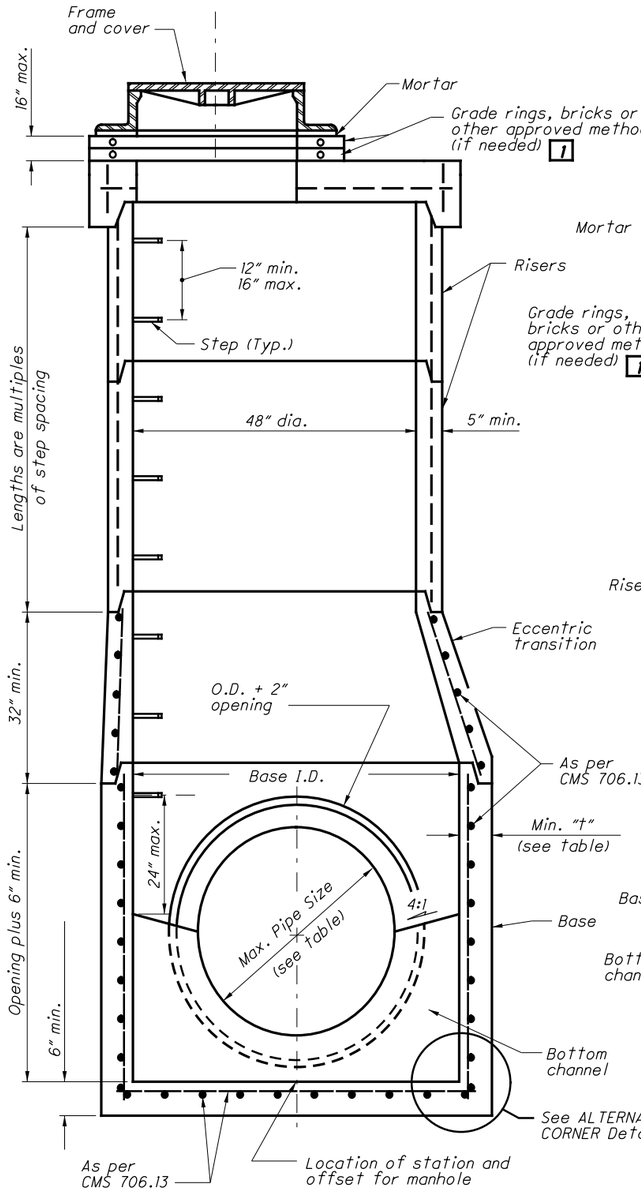

60" to 108" PRECAST BASE

SEE TABLE FOR MAXIMUM PIPE SIZES

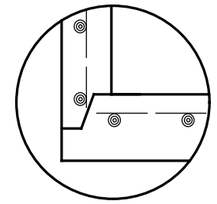

ALTERNATE CORNER DETAIL

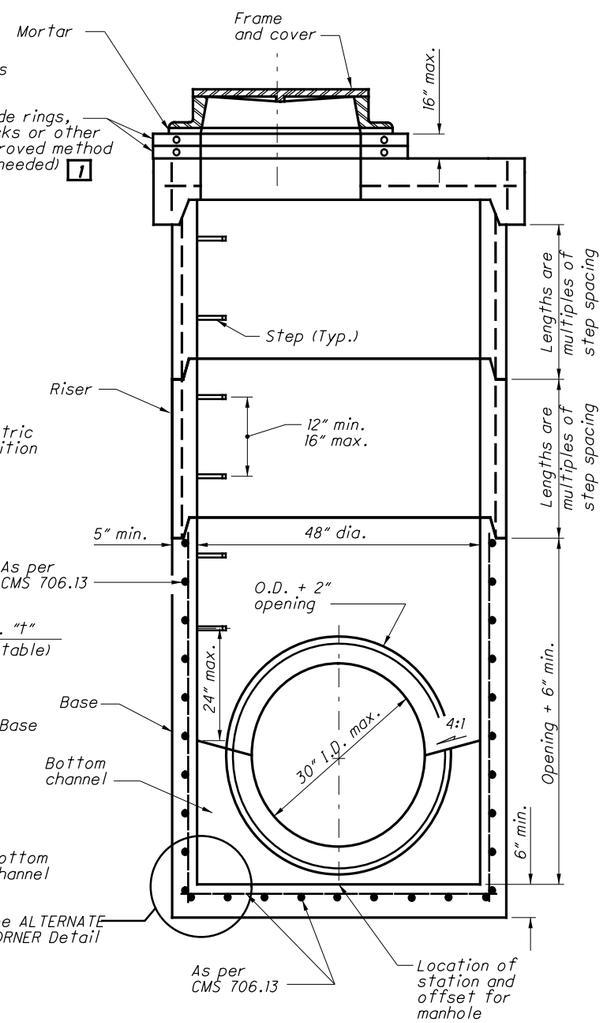

48" PRECAST BASE

FOR 30" AND SMALLER PIPE

SECTION VIEWS OF REINFORCED PRECAST MANHOLES

NOTES

GENERAL: *With normal soil and site conditions, this standard precast manhole may be used for any required manhole depth. Cast and assemble sections of the precast manhole with either all tongue or all groove ends up. Lift holes may be provided in each section for handling. Leave handling device for the flat slab in place.*

TOP: *Provide a flat slab for this section unless an eccentric cone is specified.*

TRANSITION (OR REDUCER): *This section can be either eccentric cone or flat slab.*

BASE: *Manhole No. 3 is shown with a monolithic floor and riser which may be cast in one or two operations. A permissible alternate is to cast and ship the floor and barrel separately. Provide openings for inlet and outlet pipes, either when the unit is cast or later, to meet project requirements. Bottom channels may be formed of concrete, precast in the base or field constructed as shown on* ***SCD MH-1.1 and MH-3.1.***

RISER SECTIONS: *Openings for 18" and smaller inlet pipes may be either prefabricated or cut in the field provided the sides of the pipe at the springline do not project into the manhole.*

CONNECTIONS: *Connections between precast manhole sections and pipes on sanitary sewers may be sealed with resilient connectors conforming to ASTM C 923.*

JOINT SEAL: *Furnish resilient seal between precast manhole sections on sanitary sewers and flexible gasket joints per CMS 706.11.*

OPENINGS: *The maximum pipe opening is the O.D. of the pipe being supplied plus 2" when fabricated or field cut. Fill any voids per CMS 601.*

MATERIALS: *Provide materials for bases and other precast sections, including reinforcement not specified here, that meet the requirements of CMS 706.13.*

DROP PIPE: *When specified on the plans, construct drop pipe as shown on* ***SCD MH-3.1.***

STEPS, FRAMES AND COVERS: *Meet the requirements shown on* ***SCD MH-1.1.***

TOP SLAB REBAR: *Use epoxy coated reinforcing steel within the top slab.*

LEGEND

1 *Reconstruction to grade only. Approved materials are kept on file by the Office of Materials Management.*

MAXIMUM PIPE SIZES

BASE I.D.	MIN. "t"	MAX. PIPE SIZE
60"	5"	36"
72"	6"	48"
84"	7"	54"
90"	7½"	60"
96"	8"	66"
108"	9"	72"

STATE OF OHIO DEPARTMENT OF TRANSPORTATION

STATE HYDRAULIC ENGINEER

REVISIONS
7-20-01
7-19-02
7-15-05
1-20-06
7-20-12
1-18-13

ROADWAY HYDRAULIC ENGINEER
Matt Cozzoli

OFFICE OF HYDRAULIC ENGINEERING

STANDARD HYDRAULIC CONSTRUCTION DRAWING

MANHOLE No. 3

SCD NUMBER
MH-1.2

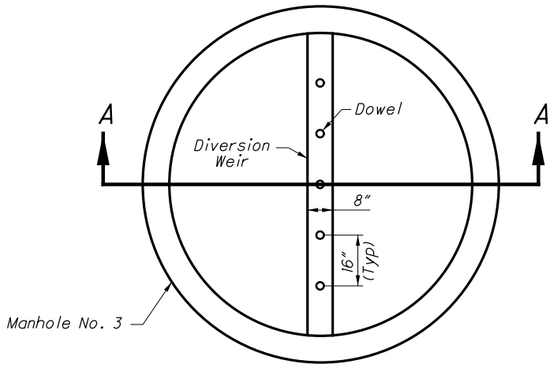

MANHOLE NO. 3 W/
__" BASE I.D. AND __" WEIR
(NTS)

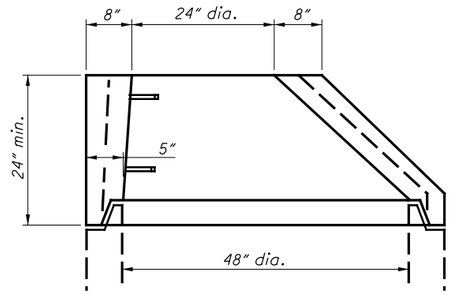

ALTERNATE
ECCENTRIC CONE TOP
(Only if specified)

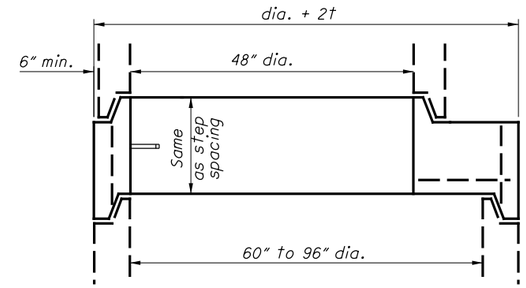

FLAT SLAB TRANSITION

NOTES

MANHOLE NO. 3 W/__" BASE I.D. AND __" DIVERSION WEIR: Furnish manhole base with precast diversion weir or construct diversion weir from Structural Concrete, 4000 psi compressive strength concrete or Brick and Masonry Units conforming to CMS 611. A bottom channel section for the manhole is not required when a diversion weir is specified on the plans.

Place diversion weir perpendicular to flow of inflowing trunk sewer. Dowel concrete or masonry units into the base of the manhole to a depth of 3" using epoxy coated #4 reinforcing bars. Start dowels at the center of the diversion weir and space 16" on center across the entire weir.

All materials and labor, including excavation and backfill, are paid for at the contract price for **ITEM 611 - MANHOLE NO. 3 WITH __" BASE I.D. AND __" DIVERSION WEIR.**

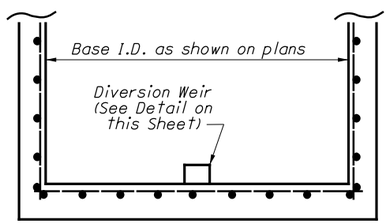

SECTION A-A
(NTS)

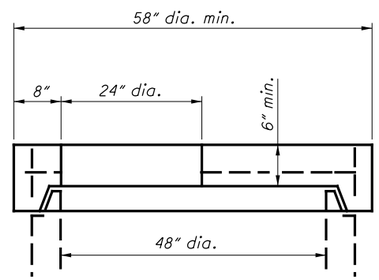

FLAT SLAB TOP

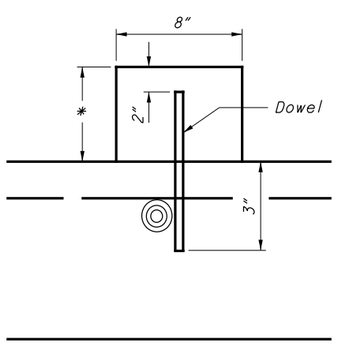

* Furnish weir height as shown in plans.

DIVERSION WEIR DETAIL
(NTS)

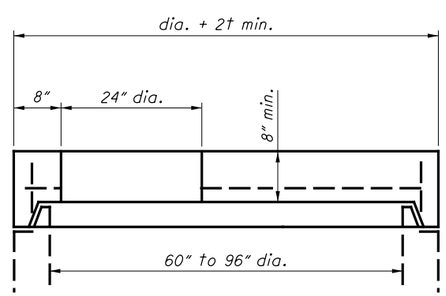

FLAT SLAB TOP

STATE OF OHIO DEPARTMENT OF TRANSPORTATION

STATE HYDRAULIC ENGINEER

REVISIONS
7-20-01
7-19-02
7-15-06
7-20-06
7-20-12
1-18-13

ROADWAY HYDRAULIC ENGINEER
Matt Cozzoli

OFFICE OF HYDRAULIC ENGINEERING

STANDARD HYDRAULIC CONSTRUCTION DRAWING

MANHOLE No. 3

SCD NUMBER
MH-1.2

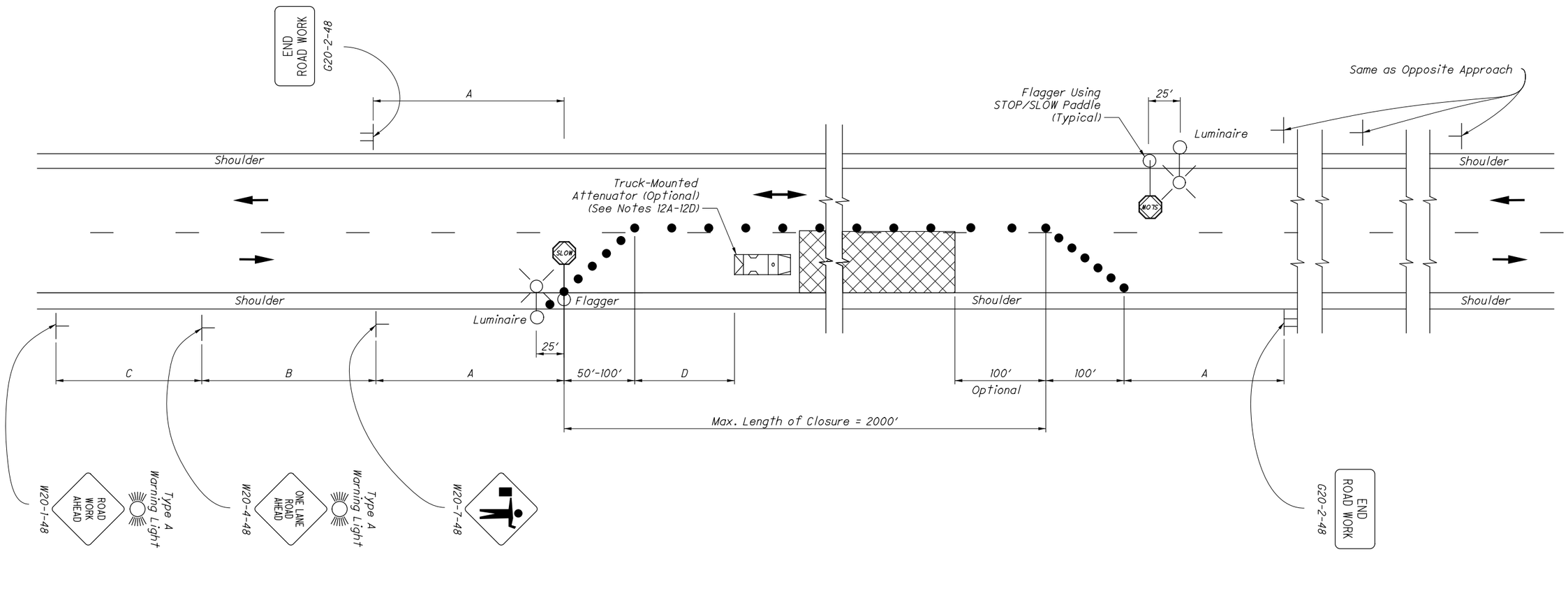

TABLE I (SIGN SPACING)

ROAD TYPE	DISTANCE BETWEEN SIGNS (FT)		
	A	B	C
Two-Lane (≤ 40 MPH)	100	100	100
Two-Lane (45-50 MPH)	350	350	350
Two-Lane (55-60 MPH)	500	500	500

TABLE II

SPEED LIMIT (MPH)	BUFFER (D) (FT) MIN.
25	155
30	200
35	250
40	305
45	360
50	425
55	495
60	570

LEGEND

- WORK AREA
- DRUMS/CONES
- DIRECTION OF TRAVEL
- SHADOW VEHICLE

THIS DRAWING REPLACES MT-97.10 DATED 07-19-2013.

STATE OF OHIO DEPARTMENT OF TRANSPORTATION

Reynaldo Vasquez 07-18-2014
ADMINISTRATOR DATE

STDS. ENGINEER Soisson

OFFICE OF ROADWAY ENGINEERING

STANDARD ROADWAY CONSTRUCTION DRAWING

FLAGGER CLOSING 1 LANE OF A 2-LANE HIGHWAY - STATIONARY OPERATION

SCD NUMBER MT-97.10

NOTES:

FLAGGERS

1. Flaggers, one for each direction, shall be used to control traffic continuously for as long as a one lane operation is in effect. The flaggers shall be able to communicate with each other at all times.

LENGTH OF CLOSURE

2. Several small work areas close together should be combined into one work zone. However, the closure shall not be more than 2000′ long unless approved by the Engineer. The minimum length between closures shall be 2000′. Only one side of the road shall be closed in any one work zone.

SIGN LOCATION AND SPACING

3A. The minimum spacing between work zone signs is shown in Table I. Maximum spacing should not be greater than 1.5 times the distances shown in Table I.

3B. Sign spacing should be adjusted to avoid conflict with existing signs. Minimum spacing to existing signs shall be 200′ for speeds of 45 mph or less and a minimum of 400′ for speeds of 50 mph or greater.

3C. The location of the advance warning signs should be adjusted to provide for adequate sight distance for the existing vertical and horizontal roadway alignment.

ADJUSTMENTS FOR SIGHT DISTANCE

4. The location of the flagger station and the advance warning signs should be adjusted to provide for adequate sight distance for the existing vertical and horizontal roadway alignment.

BASIC SIGNING

5A. ROAD WORK AHEAD (W20-1) signs shall be provided on entrance ramps or roadways entering the work limits.

5B. END ROAD WORK (G20-2) signs are only required for lane closures of more than 1 day. It is intended that these signs be placed on the mainline, on all exit ramps, and on roadways exiting the work limits.

5C. Overlapping of signing for adjacent projects should be avoided where the messages could be confusing. Any ROAD WORK AHEAD (W20-1) or END ROAD WORK (G20-2) sign which falls within the limits of another traffic control zone shall be omitted or covered during the period when both projects are active.

SIGNING DETAILS

6A. The Advisory Speed (W13-1P) plaque shall be used when specified in the plan.

6B. 36″ warning signs may be used when the approach speed limit is 40 mph or less.

FLASHING WARNING LIGHTS

7. Type A flashing warning lights shown on the ROAD WORK AHEAD (W20-1) signs and on the LANE CLOSED AHEAD (W20-5) signs are required whenever a night lane closure is necessary.

DRUMS / CONES

8A. Drum spacing shall be as follows:

a) Spacing along the closure shall be 40′ center-to-center.
b) Spacing along the approach taper shall be 10′ center-to-center.

8B. Cones may be substituted for drums as follows:

a) Cones used for daytime traffic control shall have a minimum height of 28″.
b) Cones used for nighttime traffic control shall have a minimum height of 42″.
c) Use of cones at night shall be prohibited along tapers.

8C. Provisions shall be made to stabilize the cones and drums to prevent them from blowing over.

8D. A minimum of two drums shall be used to close the paved shoulder.

(RESERVED FOR FUTURE USE)

9A. (intentionally blank)

AREA ILLUMINATION

10A. Adequate area illumination of each flagger station shall be provided at night. Use of portable flood lighting is acceptable. Luminaires shall be located adjacent to each flagger station.

10B. To ensure the adequacy of floodlight placement and the elimination of glare, the Contractor and the Engineer shall drive through the worksite each night when the lighting is in place. Light placement and shielding shall be adjusted to the satisfaction of the Engineer.

INTERSECTION / DRIVEWAY ACCESS

11. Within the length of closure, provision shall be made to control traffic entering from intersecting streets and major drives as necessary to prevent wrong-way movements and to keep vehicles off of new pavement not ready for traffic. The Contractor shall:

a) Place across the closed lane, either three drums (cones) or barricades, and/or
b) Provide an additional flagger at every public street intersection and major driveway.

Drums (cones) placed across the closed lane shall be located 25′ beyond the projected pavement edges of the driveway or cross highway, as shown in Standard Construction Drawings (SCDs MT-97.11 or MT-97.12. For barricades, see SCD MT-101.60.

Existing STOP signs shall be relocated as necessary to assure proper location for the traffic conditions.

The method of control shall be subject to the approval of the Engineer.

SHADOW VEHICLE

12A. The shadow vehicle shall be in place and unoccupied whenever workers are in the work area. This vehicle shall be removed from the pavement whenver workers are not in the work area.

12B. The shadow vehicle shall be equipped with a high-intensity yellow rotating, flashing, oscillating, or strobe light(s).

12C. The vehicle shall be equipped with a truck-mounted attenuator when called for in the plans.

12D. Other protective devices may be used in lieu of the shadow vehicle shown when approved by the Engineer.

CHIP SEAL OPERATIONS

13. For chip seal operations, additional signing shall be incorporated in the advanced warning area.

a) The LOOSE GRAVEL (W8-7) and FRESH TAR (W21-2) signs shall both be used in advance of the chip seal operation.
b) Repeat the LOOSE GRAVEL sign with a 35 mph Advisory Speed (W13-1) plaque every half mile per CMS 422.09.
c) The FRESH TAR and the LOOSE GRAVEL signs shall both be used for signing of side roads intersecting the work area.

THIS DRAWING REPLACES MT-97.10 DATED 07-19-2013.

STATE OF OHIO DEPARTMENT OF TRANSPORTATION
Reynaldo Arangel 07-18-2014
ADMINISTRATOR DATE

STDS. ENGINEER Soisson

OFFICE OF ROADWAY ENGINEERING

STANDARD ROADWAY CONSTRUCTION DRAWING

FLAGGER CLOSING 1 LANE OF A 2-LANE HIGHWAY - STATIONARY OPERATION

SCD NUMBER MT-97.10

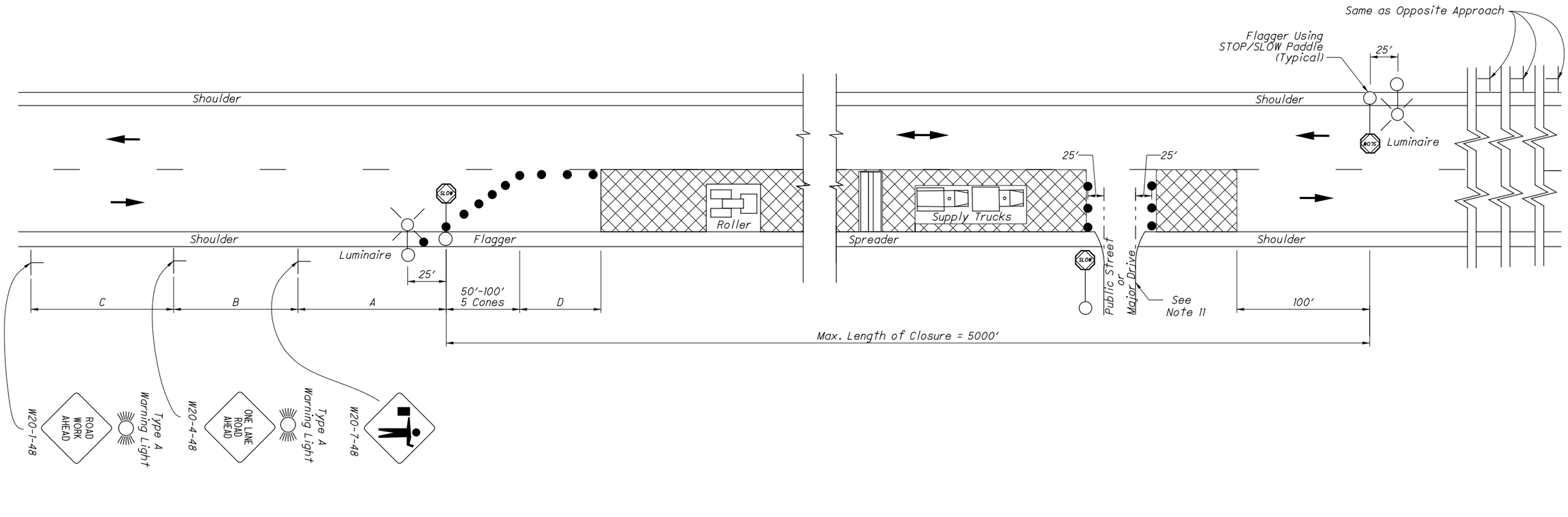

TABLE I (SIGN SPACING)

ROAD TYPE	DISTANCE BETWEEN SIGNS (FT)		
	A	B	C
Two Lane ≤ 40 MPH	100	100	100
Two Lane 45-50 MPH	350	350	350
Two Lane 55-60 MPH	500	500	500

TABLE II

SPEED LIMIT (MPH)	BUFFER (D) (FT) MIN.
25	155
30	200
35	250
40	305
45	360
50	425
55	495
60	570

LEGEND

WORK AREA

CONES

DIRECTION OF TRAVEL

THIS DRAWING REPLACES MT-97.11 DATED 07-19-2013.

STATE OF OHIO DEPARTMENT OF TRANSPORTATION

ADMINISTRATOR

07-18-2014
DATE

STDS. ENGINEER Soisson

OFFICE OF ROADWAY ENGINEERING

STANDARD ROADWAY CONSTRUCTION DRAWING

FLAGGER CLOSING 1 LANE OF A 2-LANE HIGHWAY FOR PAVING OPERATIONS (NON-FED ONLY)

SCD NUMBER MT-97.11

NOTES:

FLAGGERS

1. Flaggers, one for each direction, shall be used to control traffic continuously for as long as a one lane operation is in effect. The flaggers shall be able to communicate with each other at all times.

LENGTH OF CLOSURE

2. It is required that the length of closure be kept to a minimum at all times, as directed by the Engineer, with a maximum allowable length of 5000′.

   When the ambient temperature exceeds 80 degrees Fahrenheit the Engineer may increase the maximum allowable length of closure to allow for sufficient cooling of new pavement.

   The Engineer may shorten the maximum allowable length of closure to relieve excessive traffic backups or to improve traffic operation.

SIGN LOCATION AND SPACING

3A. The minimum spacing between work zone signs is shown in Table I. Maximum spacing should not be greater than 1.5 times the distances shown in Table I.

3B. Sign spacing should be adjusted to avoid conflict with existing signs. Minimum spacing to existing signs shall be 200′ for speeds of 45 mph or less and a minimum of 400′ for speeds of 50 mph or greater.

3C. The location of the advance warning signs should be adjusted to provide for adequate sight distance for the existing vertical and horizontal roadway alignment.

ADJUSTMENTS FOR SIGHT DISTANCE

4. The location of the flagger station and the advance warning signs should be adjusted to provide for adequate sight distance for the existing vertical and horizontal roadway alignment.

BASIC SIGNING

5A. ROAD WORK AHEAD (W20-1) signs shall be provided on entrance ramps or roadways entering the work limits.

5B. END ROAD WORK (G20-2) signs are only required for lane closures of more than 1 day. It is intended that these signs be placed on the mainline, on all exit ramps, and on roadways exiting the work limits.

5C. Overlapping of signing for adjacent projects should be avoided where the messages could be confusing. Any ROAD WORK AHEAD or END ROAD WORK sign which falls within the limits of another traffic control zone shall be omitted or covered during the period when both projects are active.

SIGNING DETAILS

6A. The Advisory Speed (W13-1P) plaque shall be used when specified in the plan.

6B. 36″ warning signs may be used when the approach speed limit is 40 mph or less.

FLASHING WARNING LIGHTS

7. Type A flashing warning lights shown on the ROAD WORK AHEAD (W20-1) signs and on the LANE CLOSED AHEAD (W20-5) signs are required whenever a night lane closure is necessary.

CONES

8A. Cone spacing shall be as follows:

   a) Spacing along the buffer shall be 40′ center-to-center.
   b) Spacing along the approach taper shall be 10′ center-to-center.

8B. Cone sizes shall be as follows:

   a) Cones used for daytime traffic control shall have a minimum height of 28″.
   b) Cones used for nighttime traffic control shall have a minimum height of 42″.

8C. Provisions shall be made to stabilize the cones to prevent them from blowing over.

8D. A minimum of two cones shall be used to close the paved shoulder.

(RESERVED FOR FUTURE USE)

9A. (intentionally blank)

AREA ILLUMINATION

10A. Adequate area illumination of each flagger station shall be provided at night. Use of portable flood lighting is acceptable.

10B. To ensure the adequacy of floodlight placement and the elimination of glare, the Contractor and the Engineer shall drive through the worksite each night when the lighting is in place. Light placement and shielding shall be adjusted to the satisfaction of the Engineer.

INTERSECTION / DRIVEWAY ACCESS

11. Within the length of closure, provision shall be made to control traffic entering from intersecting streets and major drives as necessary to prevent wrong-way movements and to keep vehicles off of new pavement not ready for traffic. The Contractor shall:

   a) Place across the closed lane, either three cones or barricades, and/or
   b) Provide an additional flagger at every public street intersection and major driveway.

   Cones placed across the closed lane shall be located 25′ beyond the projected pavement edges of the driveway or cross highway. For barricades, see Standard Construction Drawing MT-101.60.

   Existing STOP signs shall be relocated as necessary to assure proper location for the traffic conditions.

   The method of control shall be subject to the approval of the Engineer.

CHIP SEAL OPERATION

12. For chip seal operations, additional signing shall be incorporated in the advance warning area.

   a) The LOOSE GRAVEL (W8-7) and FRESH TAR (W21-2) signs shall both be used in advance of the chip seal operation.
   b) Repeat the LOOSE GRAVEL sign with a 35 mph Advisory Speed (W13-1) plaque every half mile per CMS 422.09.
   c) The LOOSE GRAVEL and FRESH TAR signs shall both be used for signing of side roads intersecting the work area.

THIS DRAWING REPLACES MT-97.11 DATED 07-19-2013.

STATE OF OHIO DEPARTMENT OF TRANSPORTATION
Reynaldo Vasquez 07-18-2014
ADMINISTRATOR DATE

STDS. ENGINEER Soisson

OFFICE OF ROADWAY ENGINEERING

STANDARD ROADWAY CONSTRUCTION DRAWING

FLAGGER CLOSING 1 LANE OF A 2-LANE HIGHWAY FOR PAVING OPERATIONS (NON-FED ONLY)

SCD NUMBER MT-97.11

APPENDIX D
PREVAILING WAGE RATES

Page

1. Prevailing Wage Determination Letter……..... 2
2. Prevailing Wage Threshold Levels..... 3
3. Instructions for preparing Certified Payroll Reports…….. ……. 4
4. Affidavit of Contractor Compliance……..... 5
5. Prevailing Wage Notification to Employee……..... 6
6. Certified Payroll Form…….…..... 7

Current prevailing wage information can be viewed at the Ohio Department of Commerce website listed below:

http://www.com.ohio.gov/dico/

- Go to 'Find Forms & Publications" (middle of the web page).

  1. Select Item: Wage & Hour
  2. Prevailing Wage
  3. [Select an item]

You will need to register on-line for an account to view the current wage rates

- Once you've logged into the site:
  - Step 1: Select 'Hilliard City of' from the pull-down menu
  - Step 2: Choose the project name from the pull-down menu
  - Step 3: Click 'I Agree' button

- You will then be taken to a page where you can narrow down your search for a particular county, union, or Classification

Prevailing Wage Determination Cover Letter

County: FRANKLIN
Determination Date: 05/07/2015
Expiration Date: 08/07/2015

THE FOLLOWING PAGES ARE PREVAILING RATES OF WAGES ON PUBLIC IMPROVEMENTS FAIRLY ESTIMATED TO BE MORE THAN THE AMOUNT IN O.R.C. SEC. 4115.03 (b) (1) or (2), AS APPLICABLE.

Section 4115.05 provides, in part: “Where contracts are not awarded or construction undertaken within ninety days from the date of the establishment of the prevailing wages, there shall be a redetermination of the prevailing rate of wages before the contract is awarded.” The expiration date of this wage schedule is listed above for your convenience only. This wage determination is not intended as a blanket determination to be used for all projects during this period without prior approval of this Department.

Section 4115.04, Ohio Revised Code provides, in part: “Such schedule of wages shall be attached to and made a part of the specifications for the work, and shall be printed on the bidding blanks where the work is done by contract...”

The contract between the letting authority and the successful bidder shall contain a statement requiring that mechanics and laborers be paid a prevailing rate of wage as required in Section 4115.06, Ohio Revised Code.

The contractor or subcontractor is required to file with the contracting public authority upon completion of the project and prior to final payment therefore an affidavit stating that he has fully complied with Chapter 4115 of the Ohio Revised Code.

The wage rates contained in this schedule are the “Prevailing Wages” as defined by Section 4115.03, Ohio Revised Code (the basic hourly rates plus certain fringe benefits). These rates and fringes shall be a minimum to be paid under a contract regulated by Chapter 4115 of the Ohio Revised Code by contractors and subcontractors. The prevailing wage rates contained in this schedule include the effective dates and wage rates currently on file. In cases where future effective dates are not included in this schedule, modifications to the wage schedule will be furnished to the Prevailing Wage Coordinator appointed by the public authority as soon as prevailing wage rates increases are received by this office.

“There shall be posted in a prominent and accessible place on the site of work a legible statement of the Schedule of Wage Rates specified in the contract to the various classifications of laborers, workmen, and mechanics employed, said statement to remain posted during the life of such contract.” Section 4115.07, Ohio Revised Code.

Apprentices will be permitted to work only under a bona fide apprenticeship program if such program exists and if such program is registered with the Ohio Apprenticeship Council.

Section 4115.071 provides that no later than ten days before the first payment of wages is due to any employee of any contractor or subcontractor working on a contract regulated by Chapter 4115, Ohio Revised Code, the contracting public authority shall appoint one of his own employees to act as the prevailing wage coordinator for said contract. The duties of the prevailing wage coordinator are outlined in Section 4115.071 of the Ohio Revised Code.

Section 4115.05 provides for an escalator in the prevailing wage rate. Each time a new rate is established, that rate is required to be paid on all ongoing public improvement projects.

A further requirement of Section 4115.05 of the Ohio Revised Code is: “On the occasion of the first pay date under a contract, the contractor shall furnish each employee not covered by a collective bargaining agreement or understanding between employers and bona fide organizations of Labor with individual written notification of the job classification to which the employee is assigned, the prevailing wage determined to be applicable to that classification, separated into the hourly rate of pay and the fringe payments, and the identity of the prevailing wage Coordinator appointed by the public authority. The contractor or subcontractor shall furnish the same notification to each affected employee every time the job classification of the employee is changed.”

Work performed in connection with the installation of modular furniture may be subject to prevailing wage.

THIS PACKET IS NOT TO BE SEPARATED BUT IS TO REMAIN COMPLETE AS IT IS SUBMITTED TO YOU.
(Reference guidelines and forms are included in this packet to be helpful in the compliance of the Prevailing Wage law.)
wh1500

Department of Commerce

Division of Industrial Compliance

PREVAILING WAGE THRESHOLD LEVELS IMPORTANT NOTICE

Before advertising for bids, contracting, or undertaking construction with its own forces, to construct a public improvement, the Public Authority shall have the Ohio Department of Commerce - Division of Industrial Compliance - Bureau of Wage and Hour Administration determine the prevailing rates of wages for workers employed on the public improvement. The wage determination must be included in the project specifications and printed on the bidding blanks where work is done by contract.

As of September 29, 2013:

"New" construction threshold level has been adjusted to : • **The previous threshold for this type of construction was $200,000 from September 29, 2012 through September 28, 2013**	**$250,000**

"Reconstruction, enlargement, alteration, repair, remodeling, renovation, or painting" threshold level has been adjusted to: • **The previous threshold for this type of reconstruction was $60,000 from September 29, 2012 through September 28, 2013**	**$75,000**

As of January 1, 2014:

"New" construction that involves roads, streets, alleys, sewers, ditches and other works connected to road or bridge construction threshold level has been adjusted to:	**$84,314**

"Reconstruction, enlargement, alteration, repair, remodeling, renovation, or painting" that involves roads, streets, alleys, sewers, ditches and other works connected to road or bridge construction threshold level has been adjusted to:	**$25,261**

A) Thresholds are to be adjusted biennially by the Director of the Ohio Department of Commerce.
B) Biennial adjustments to threshold levels are made according to the Building Cost for Skilled Labor Index published by McGraw-Hill's Engineering News-Record, but may not increase or decrease more than 3% for any year.

If there are questions concerning this notification, please contact:
Ohio Department of Commerce
Division of Industrial Compliance
Bureau of Wage and Hour Administration
6606 Tussing Road, PO Box 4009
Reynoldsburg, Ohio 43068-9009
614-644-2239
www.com.ohio.gov

INSTRUCTIONS FOR PREPARING CERTIFIED PAYROLL REPORTS

General

Contractors and subcontractors are required by law to submit certified payroll reports for work on projects covered by Ohio's Prevailing Wage Law. This form meets the reporting requirements established by Ohio Revised Code Chapter 4115. The use of this form is not mandatory, employers may submit their own forms provided that all of the required information is included. This form may be reproduced, or additional copies obtained from:

Ohio Department of Commerce Division of Industrial Compliance and Labor Bureau of Wage & Hour Administration 6606 Tussing Rd. P. O. Box 4009 Reynoldsburg, OH 43068-9009 Phone: (614) 644-2239

Certified Payroll Heading

Employer name and address: Company's full name and address. Indicate if the company is a subcontractor, if so list the name of the General or Prime. Project: Name and location of the project, including county. Contracting Public Authority: Name and address of the contracting public authority. Week Ending: Month, day, and year for last day of reporting period. Payroll # : Indicates first, second, third, etc. payroll filed by the company for the project. Page indicator: number of pages included in the report. Project Number: Determined by the public authority. If there is no number leave blank.

Information by Column

- 1. Employee Name, Address and Social Security number: This information must be provided for all employees that perform physical labor on the project. Corporate officers, partners, and salaried employees are considered employees and must be paid the prevailing rate. Individual sole proprietors do not have to pay themselves prevailing rate but must report their hours on the project.
- 2. Work Class: List classification of work actually performed by employee. If unsure of work classification, consult the Ohio department of Commerce, Wage and Hour Bureau. Employees working more than one classification should have separate line entries for each classification. Indicate what year/level for Apprentices. Be specific when using laborer and operator classifications; for example, Backhoe Operator or Asphalt Laborer.
- 3. Hours Worked, Day & Date: In the first row of column 3 enter days of pay period example; M T W TH F S S. The second row is for the date that corresponds with each day for the pay period. In the employee information section enter the number of hours worked on the prevailing wage project and which day the hours were worked. Separate rows are labeled for (ST) straight time hours and (OT) overtime hours. All hours worked after 40, must be paid at the appropriate overtime rate.
- 4. Project Total Hours : Total the hours entered for pay period.
- 5. Base Rate: Enter actual rate per hour paid to the employee. The overtime hourly rate is time and one-half the base rate listed in the prevailing wage schedule plus fringe benefits at straight time rate. The prevailing wage schedule lists the base rate plus fringe benefit amounts. These amounts added together equal the total prevailing wage rate. Employers must pay this total amount in one of three ways.
    - Total rate may be paid in entirety in the base rate to the employee; in which case, the cash designation will be checked for fringe benefits.
    - Total rate may be paid as listed in prevailing wage rate schedule with total fringe amounts paid approved plans.
    - Total rate may be paid with a combination of base rate and fringe payments to approved plans in amounts other than those listed in schedule.
- 6. Project Gross: Enter total gross wages earned on the project for straight time and overtime. Project hours X base rate should equal project gross.
- 7. Fringes: If fringe benefits are paid in the hourly base rate, indicate this by marking the cash space. If fringe benefits are paid to approved plans as listed in the prevailing wage rate schedule, mark the space Approved Plans. If fringe benefits are paid partially in the base rate and partially to approved plans, mark the space Cash & Approved plans. List the hourly amount paid to approved plans for each fringe. If payments are not made on a per hour basis, calculate the hourly fringe credit by dividing the yearly employer contribution by the lesser of: hours actually worked in the year (these must be documented) or 2080. Fringe benefits include: Employer's share of health insurance, life insurance, retirement plan, bonus/profit sharing, sick pay, holiday pay, personal leave, vacation, and education/training programs.
- 8. Total Hours All Jobs: Total all hours worked during the pay period including non-prevailing wage jobs.
- 9. Total Gross All Jobs: Gross amount earned in the pay period for all hours worked.
- 10. Self explanatory.
- 11. Self explanatory.
- 12. Self explanatory.

webmaster@com.state.oh.us

CONNECT WITH US

Ohio.gov

Copyright©2012 Ohio Department of Commerce. All Rights Reserved.

Department of Commerce

Division of Industrial Compliance

Bureau of Wage and Hour Administration
6606 Tussing Road - PO Box 4009
Reynoldsburg, OH 43068-9009
Phone 614-644-2239 | Fax 614-728-8639
TTY/TDD 800-750-0750
www.com.ohio.gov
An Equal Opportunity Employer and Service Provider

John R. Kasich, Governor
Andre T. Porter, Director

Affidavit Of Compliance

PREVAILING WAGES

I, _____
(Name of person signing affidavit) (Title)

do hereby certify that the wages paid to all employees of

_____
(Company Name)

for all hours worked on the

_____
(Project name and location)

project, during the period from _____ to _____ are in
(Project Dates)

compliance with prevailing wage requirements of Chapter 4115 of the Ohio Revised Code. I further certify that no rebates or deductions have been or will be made, directly or indirectly, from any wages paid in connection with this project, other than those provided by law.

_____
(Signature of Officer or Agent)

Sworn to and subscribed in my presence this _____ day of _____, 20_____.

_____ (Notary Public)

The above affidavit must be executed and sworn to by the officer or agent of the contractor or subcontractor who supervises the payment of employees. This affidavit must be submitted to the owner (public authority) before the surety is released or final payment due under the terms of the contract is made.

LAW1003

PREVAILING WAGE NOTIFICATION TO EMPLOYEE

Project Name:	Job Number:
Contractor:	
Project Location:	
Jobsite posting of prevailing wage rates located:	

Prevailing Wage Coordinator	Employee
Name:	Name:
Street:	Street:
City:	City:
State / Zip:	State / Zip:
Phone:	Phone:

You will be performing work on this project that falls under these classifications. You will be paid the appropriate rate for the type of work you are performing.

Classification	Prevailing Wage Rate Total Package	Minus Your Fringe Benefits	Your Hourly Base Rate

Hourly fringe benefits paid on your behalf by this company.

Fringe	Amount	Fringe	Amount
Health Insurance		Health Insurance	
Life Insurance		Holiday	
Pension		Sick Pay	
Bonus		Training	
Other		**TOTAL HOURLY FRINGES**	

Contractor's Signature:	Date:
Employee's Signature:	Date:

whpw1512

CERTIFIED PAYROLL REPORT

Employer Name & Address	Name of General / Prime Contractor	Project Name & Location	Contracting Public Authority
Check if subcontractor ☐	Week Ending	Payroll # Page_____Of_____	Project Number

1. Employee Name, Address and Social Security Number	2. Work Class		3. Hours Worked - Day & Date							4. Project Total Hrs.	5. Base Rate	6. Project Gross	7. Fringes: Cash ☐ Approved Plans ☐ Cash & Approved Plans ☐					8. Total Hours All Jobs	9. Total Gross All Jobs	10. Taxes Withheld	11. Other Deducts	12. NET Paid
													H&W	Pens	Vac	App	Other					
		OT																				
		ST																				
		OT																				
		ST																				
		OT																				
		ST																				
		OT																				
		ST																				
		OT																				
		ST																				
		OT																				
		ST																				
		OT																				
		ST																				
		OT																				
		ST																				

Date_____My signature on this form signifies that I pay, or supervise the payment of the employees shown above. I am certifying: 1) That during the pay period reported on this form, all hours worked on this project have been paid at the appropriate prevailing wage rate for the class of work done. 2) That the fringe benefits have been paid as indicated above. 3) That no rebates or deductions have been or will be made, directly or indirectly from the total wages earned, other than permissable deductions as defined in the Ohio Revised Code Chapter 4115. 4) That apprentices are registered with the U.S. Department of Labor, Bureau of Apprenticeship and Training. The willful falsification of any of the above statements may subject the contractor or subcontractor to civil or criminal prosecution.

Name and Title _____ Signature _____