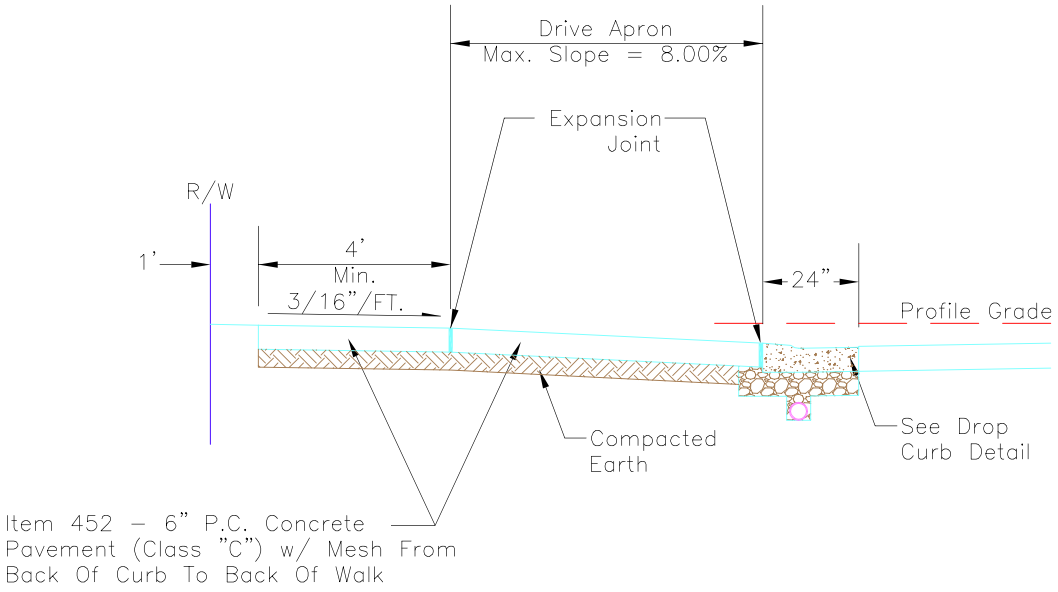

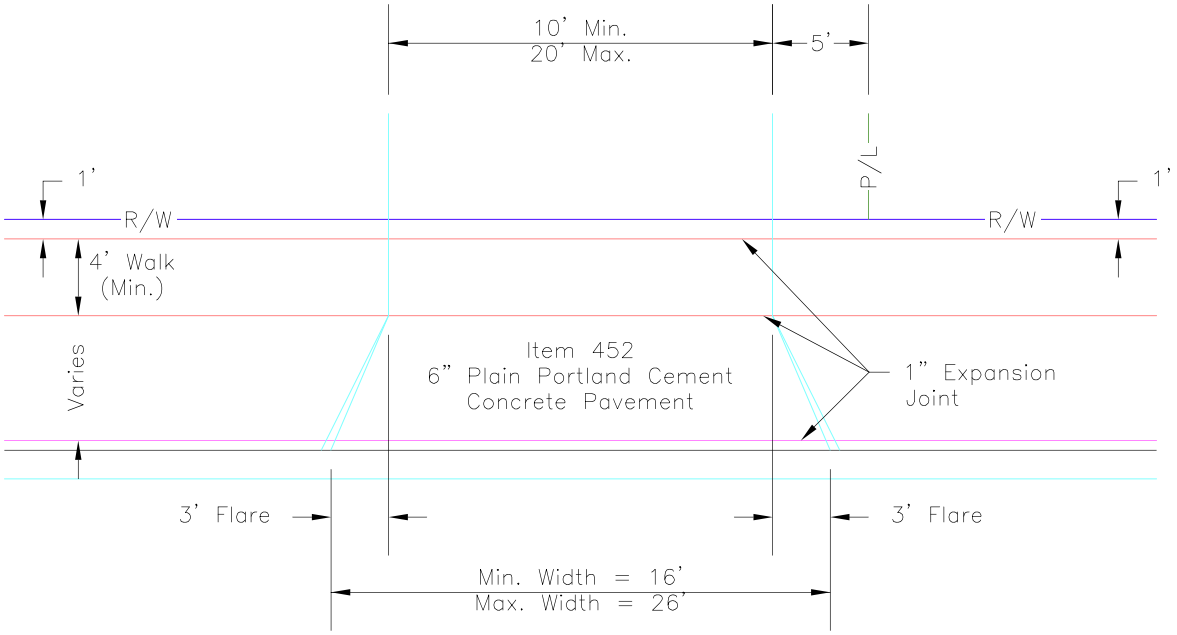

APPROVED CITY ENGINEER DATE	DRIVE DETAIL RESIDENTIAL ENTRANCE	CITY OF HILLIARD, OHIO STANDARD CONSTRUCTION DRAWING
SCALE: NTS		1/1 DD-2

S:\Public Service - Engineering\Hilliard Standards\Dwgs\ACAD\Drive Details.dwg, 5/27/2009 11:35:39 AM